Lecture 10

(BJT MODELING)

الدارات المكافئة

DR. BASSAM ATIEH

How Amplifiers Work

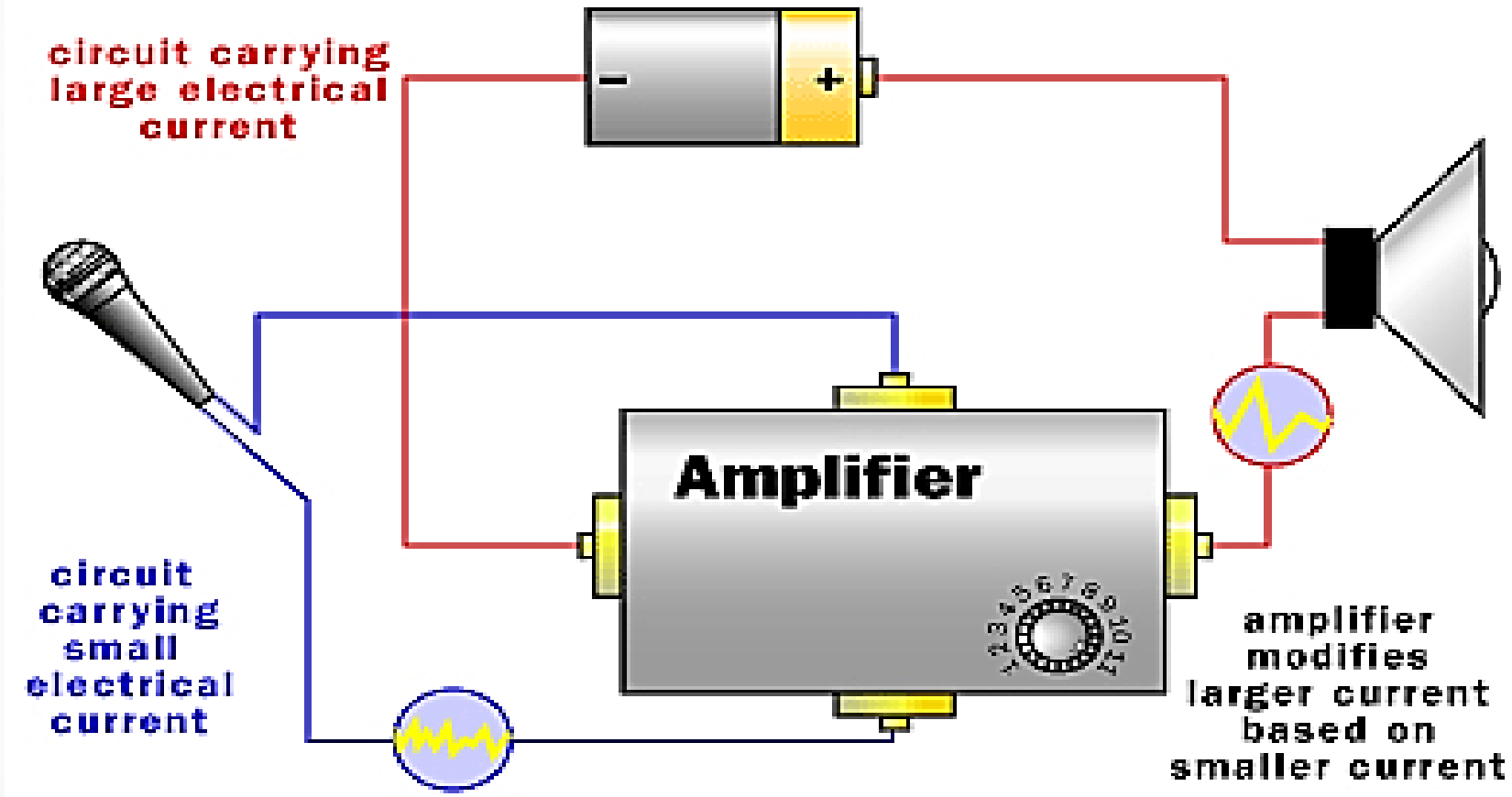

Small-Signal Amplifier Operation

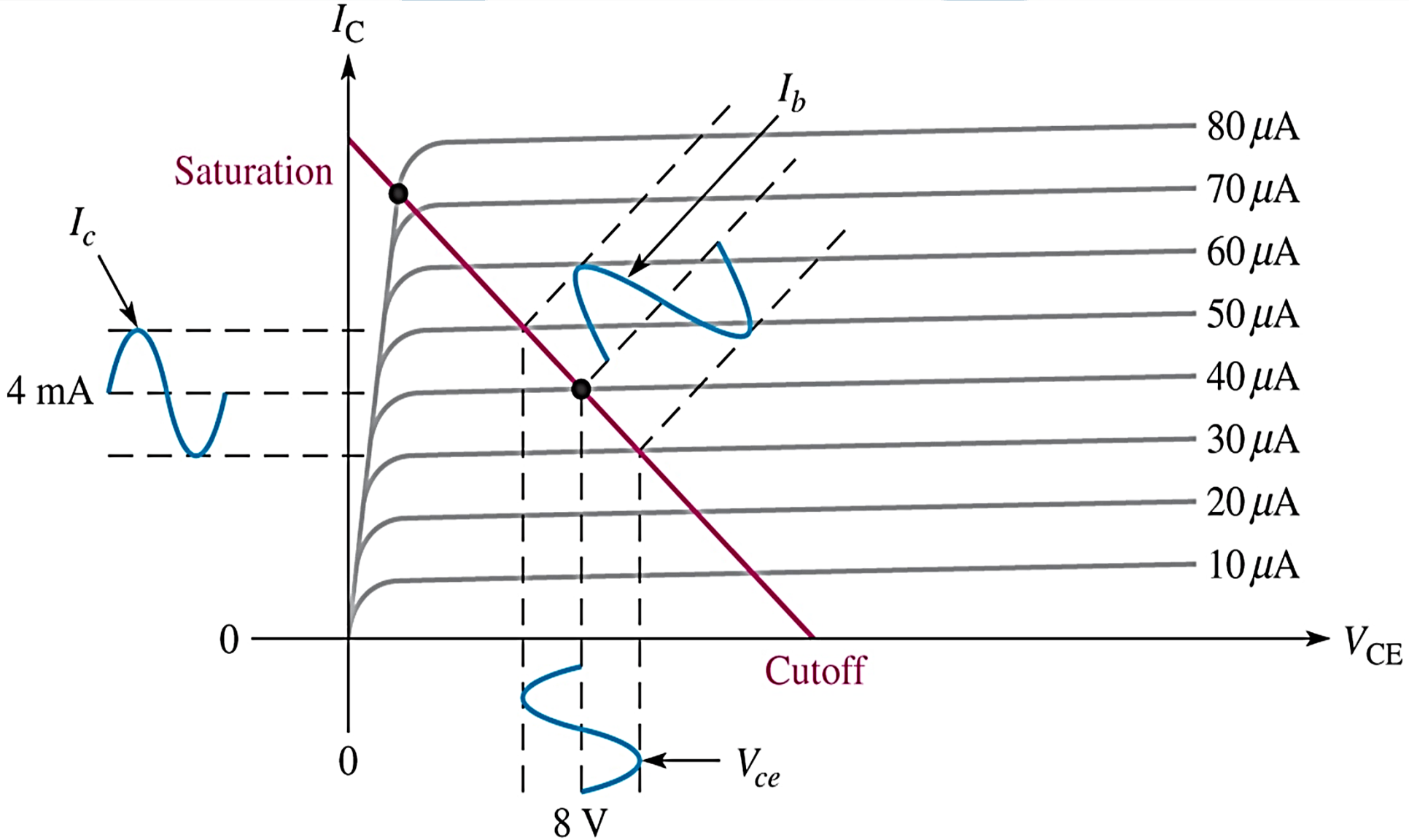

BJT Transistor Modeling

- A model equivalent circuit that represents the AC characteristics of the transistor.
- A model uses circuit elements that approximate the behavior of the transistor.
- There are two models commonly used in small signal AC analysis of a transistor:
  - r_e model
  - Hybrid equivalent model

The re Transistor Model

- BJTs are basically current-controlled devices; therefore the r_e model uses a diode and a current source to duplicate the behavior of the transistor.
- One disadvantage to this model is its sensitivity to the DC level.
- This model is designed for specific circuit conditions.

Common-Base Configuration

$$I_c = \alpha I_e \qquad r_e = \frac{26\,mV}{I_e}$$

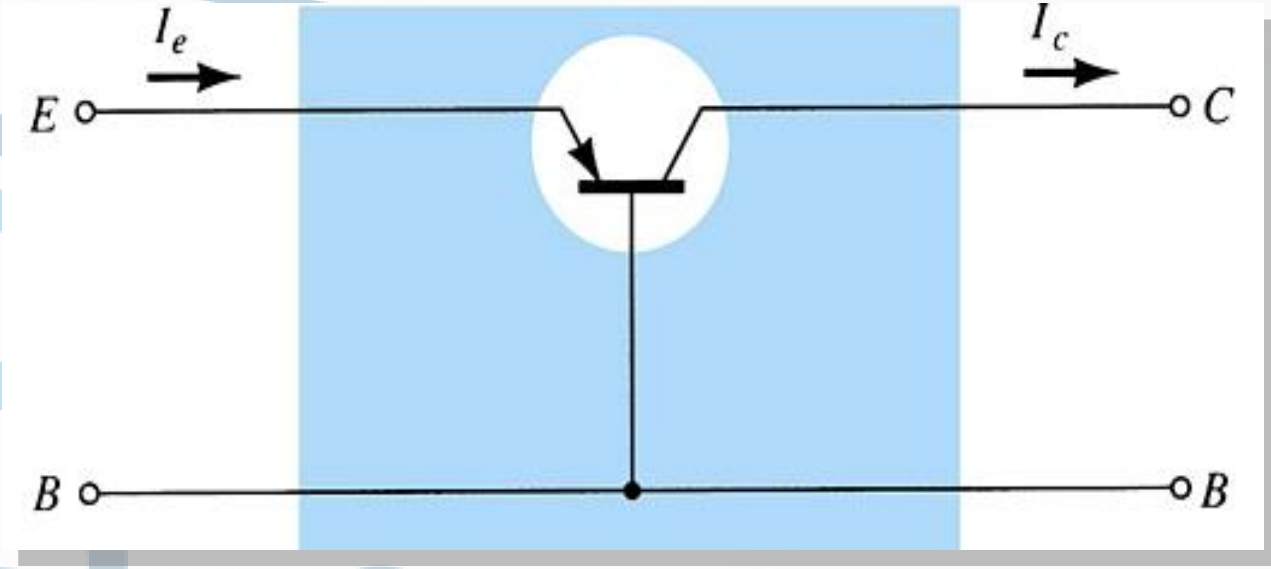

Input impedance: $Z_i = r_e$

Output impedance: $Z_o \cong \infty\Omega$

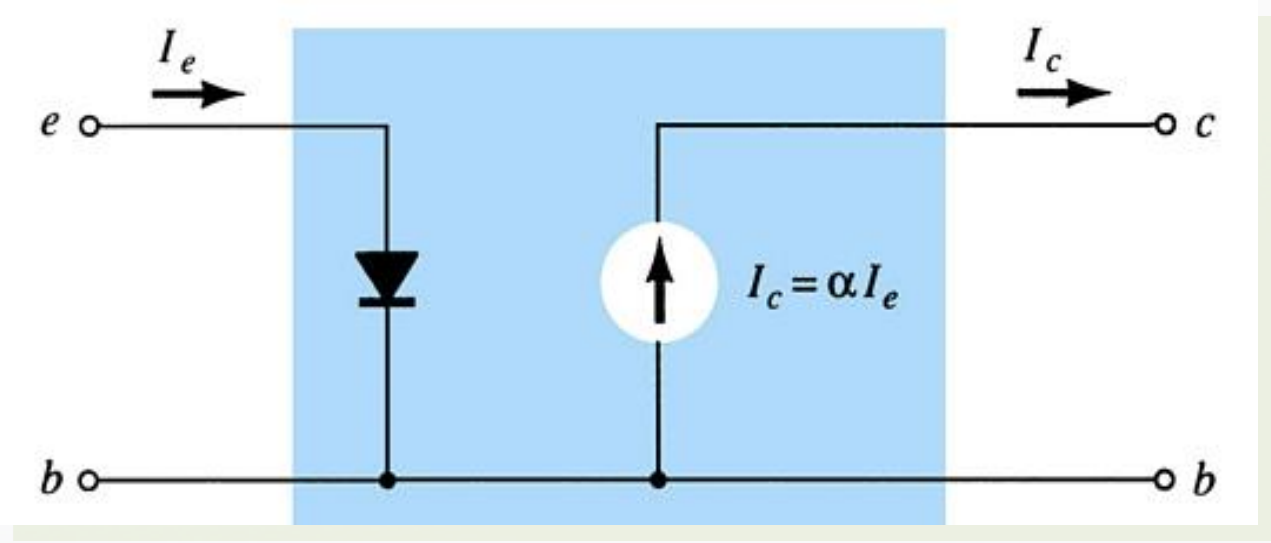

Voltage gain: $A_V = \frac{\alpha R_L}{r_e} \cong \frac{R_L}{r_e}$

Current gain: $A_i = -\alpha \cong -1$

Common-Emitter Configuration

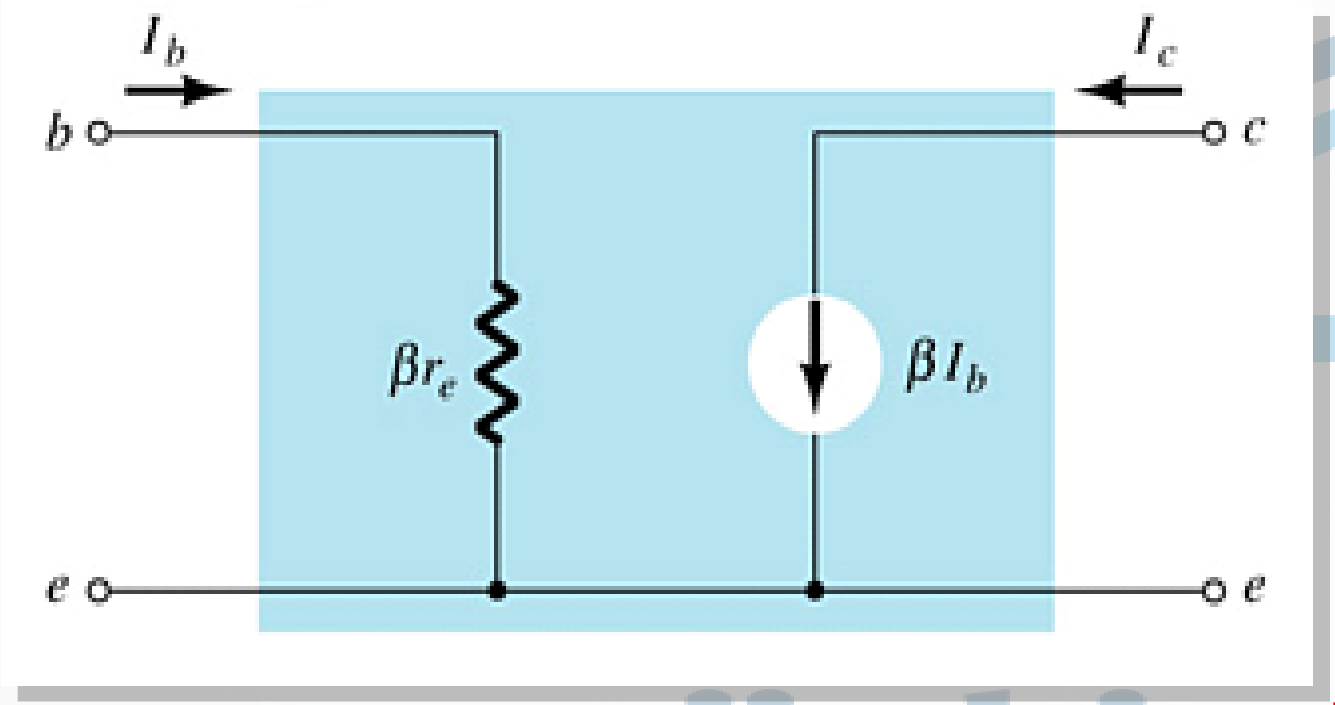

$$r_e = \frac{26\,mV}{I_e}$$

$$I_e = (\beta + 1)I_b \cong \beta I_b$$

Input impedance:

$$Z_i = \beta r_e$$

Output impedance:

$$Z_o = r_o \cong \infty\Omega$$

Voltage gain:

$$A_V = -\frac{R_L}{r_e}$$

Current gain:

$$A_i = \beta\Big|_{r_o=\infty}$$

The diode r_e model can be replaced by the resistor r_e.

The Hybrid Equivalent Model

- h_i = input resistance
- h_r = reverse transfer voltage ratio $(V_i/V_o) \cong 0$
- h_f = forward transfer current ratio (I_o/I_i)
- h_o = output conductance

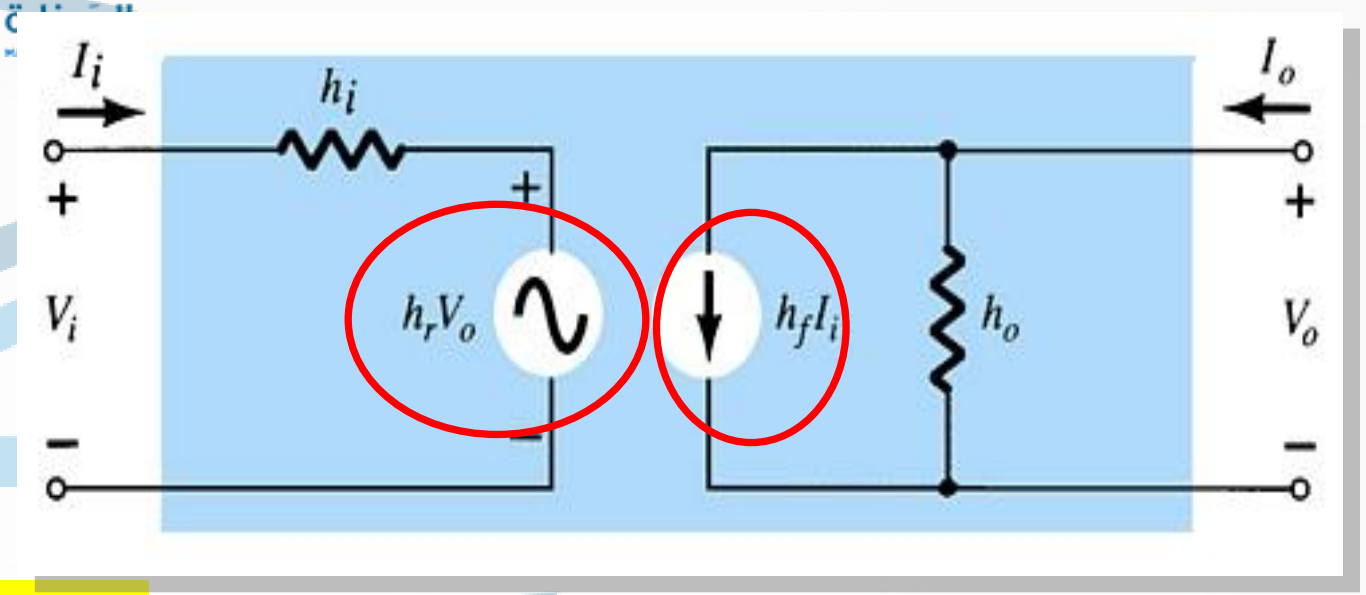

Simplified General h-Parameter Model

- hi = input resistance
- hf = forward transfer current ratio (Io/Ii)

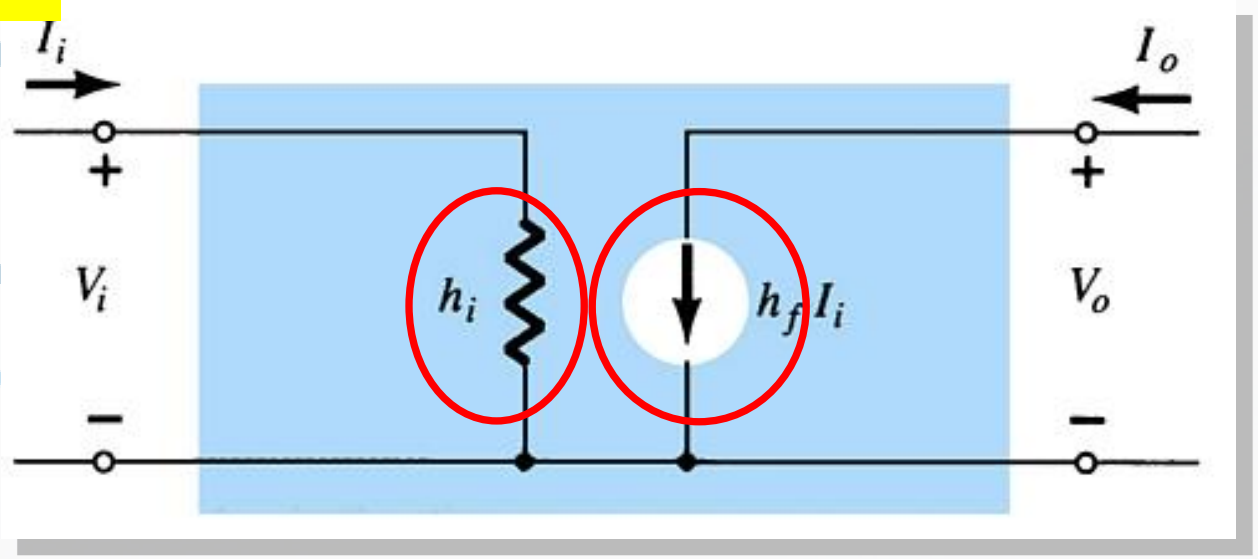

re vs. h-Parameter Model

$h_{ie} = \beta r_e$

$h_{fe} = \beta_{ac}$

Common-Emitter

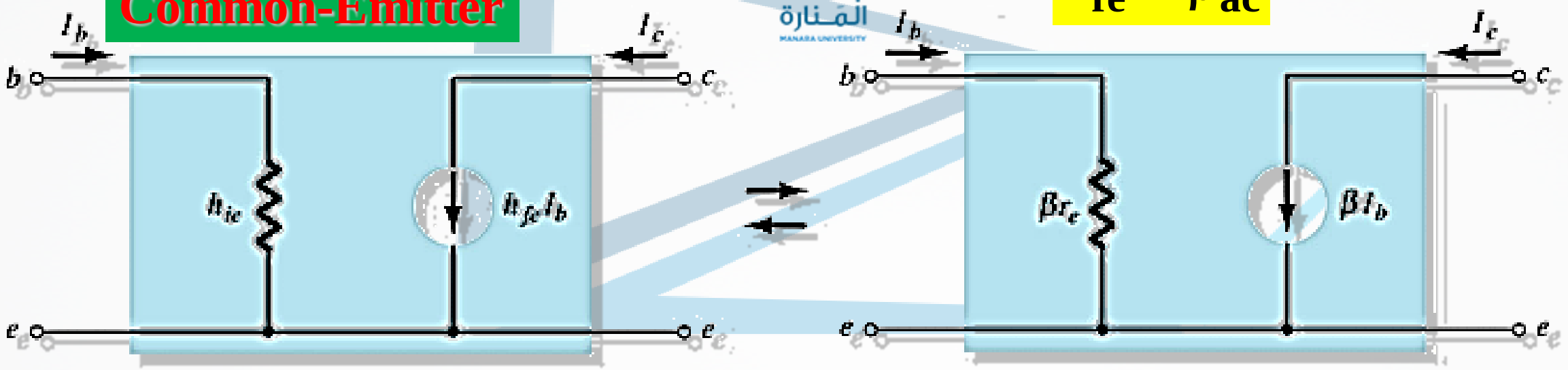

Common-Base

$h_{ib} = r_e \quad ; \quad h_{fb} = -\alpha \cong -1$

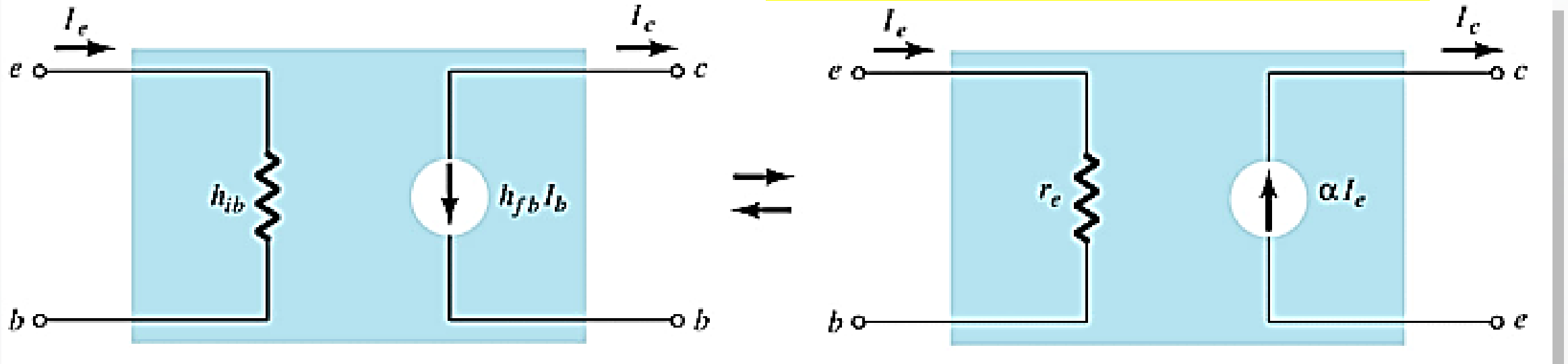

Common-Emitter Fixed-Bias Configuration

- The input is applied to the base
- The output is from the collector
- High input impedance
- Low output impedance
- High voltage and current gain
- Phase shift between input and output is 180°

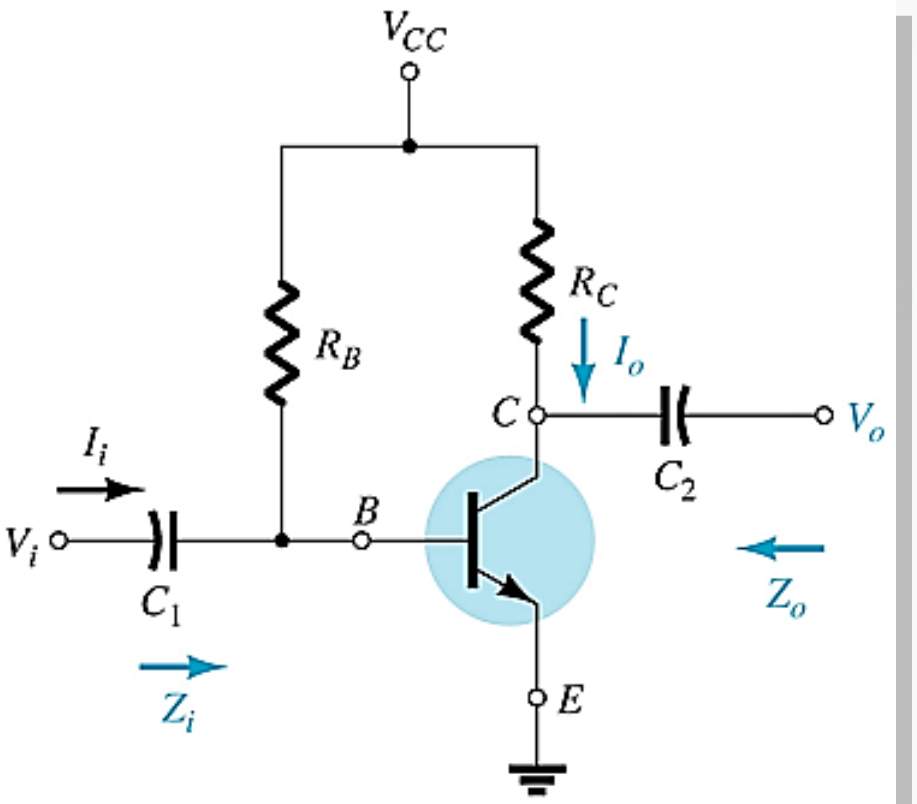

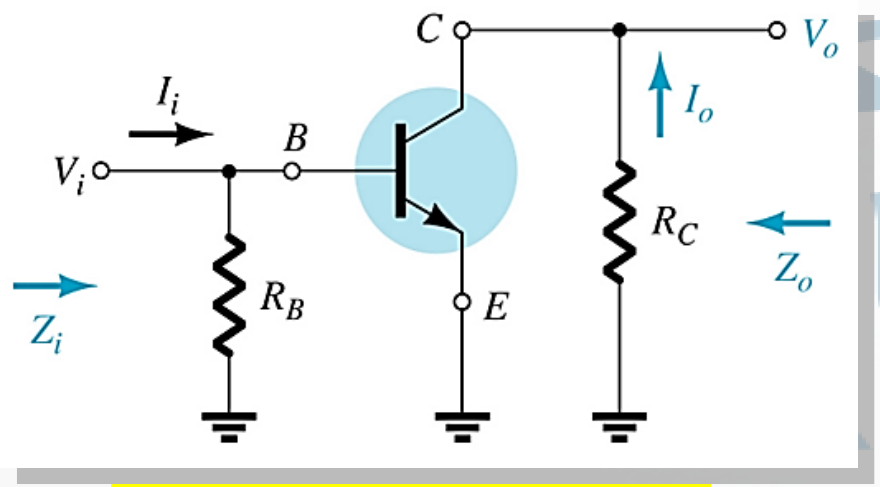

AC equivalent

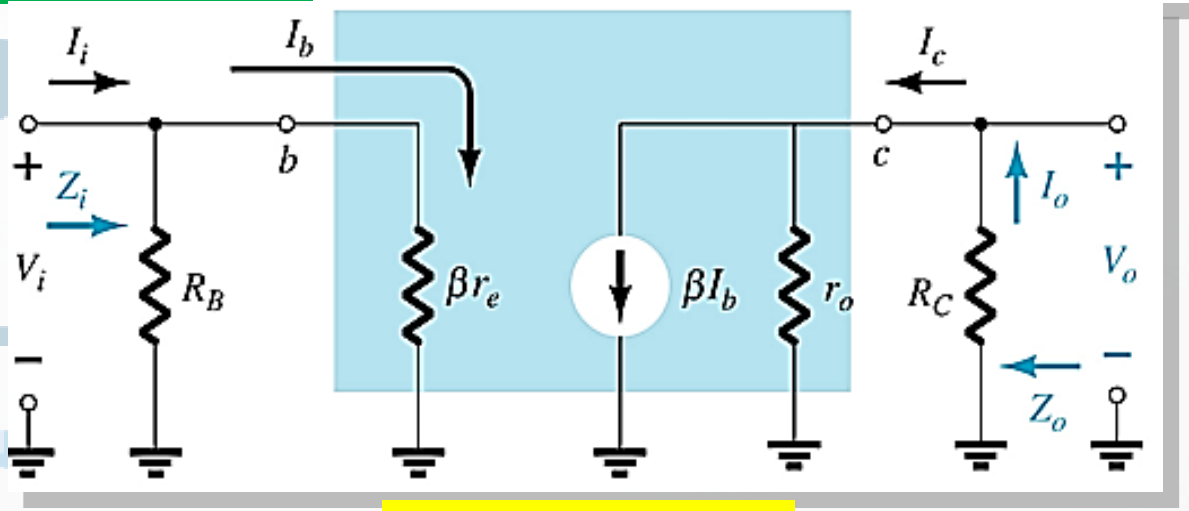

re model

Common-Emitter Fixed-Bias Calculations

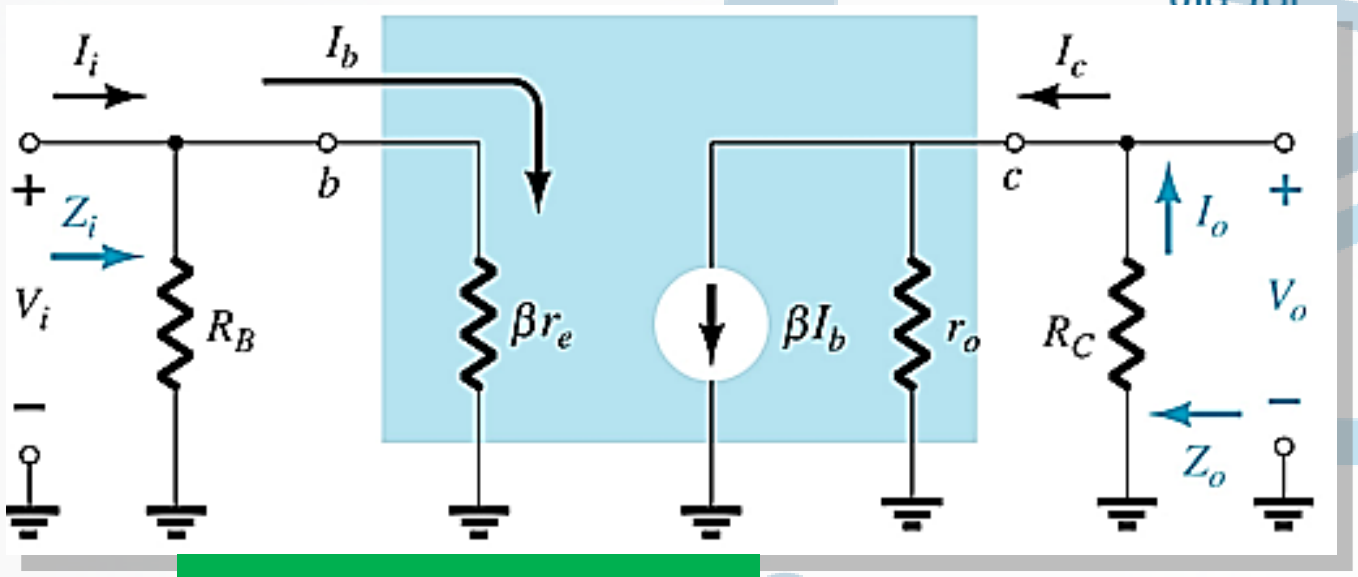

Input impedance:

$$Z_i = R_B \parallel \beta r_e$$

$$Z_i \cong \beta r_e \Big|_{R_B \geq 10\beta r_e}$$

Output impedance:

$$Z_o = R_C \parallel r_O$$

$$Z_o \cong R_C \Big|_{r_o \geq 10R_C}$$

Voltage gain:

$$A_v = \frac{V_o}{V_i} = -\frac{(R_C \parallel r_o)}{r_e}$$

$$A_v = -\frac{R_C}{r_e} \Big|_{r_o \geq 10R_C}$$

Current gain:

$$A_i = \frac{I_o}{I_i} = \frac{\beta R_B r_o}{(r_o + R_C)(R_B + \beta r_e)}$$

$$A_i \cong \beta \Big|_{r_o \geq 10R_C,\, R_B \geq 10\beta r_e}$$

Current gain from voltage gain:

$$A_i = -A_v \frac{Z_i}{R_C}$$

Common-Emitter Voltage-Divider Bias

r_e model requires you to determine β, r_e, and r_o.

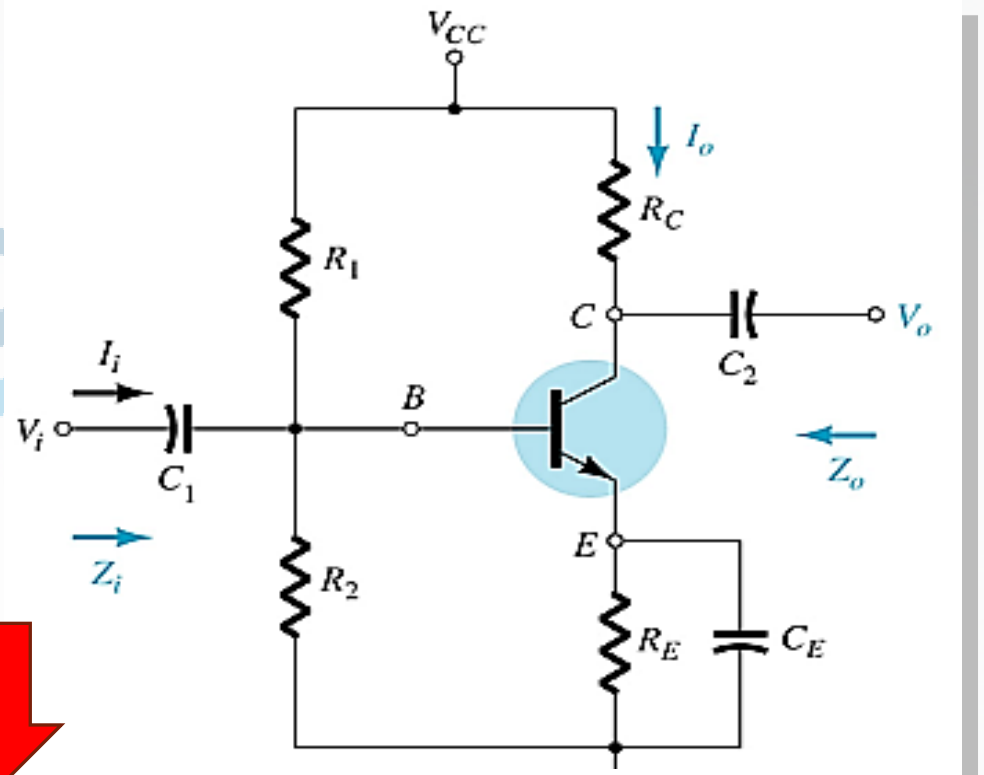

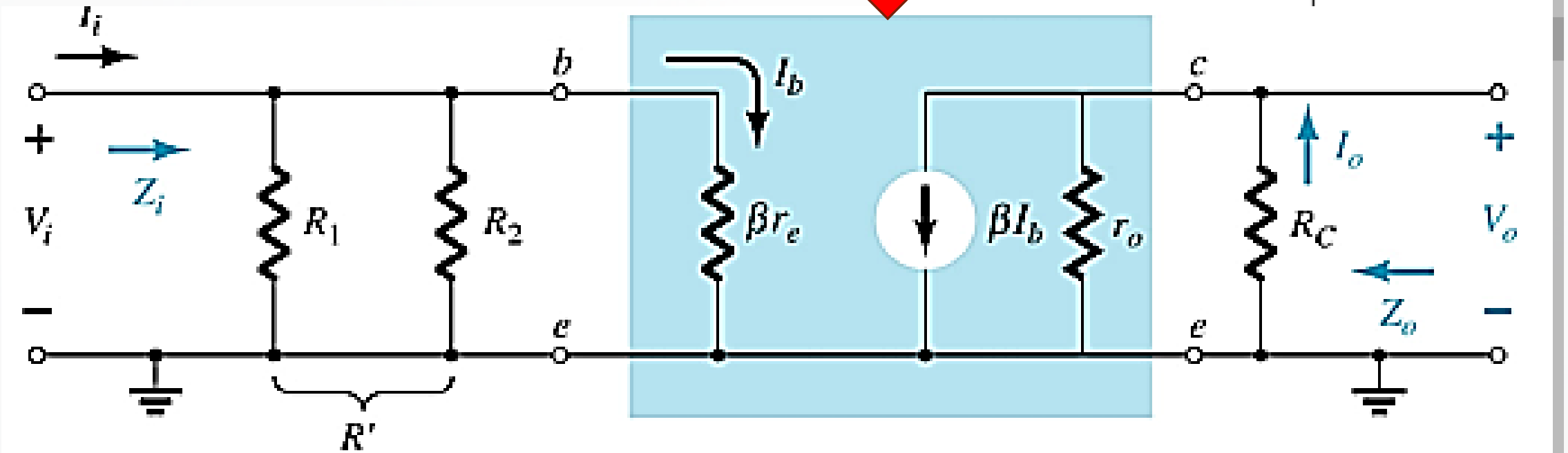

Common-Emitter Voltage-Divider Bias Calculations

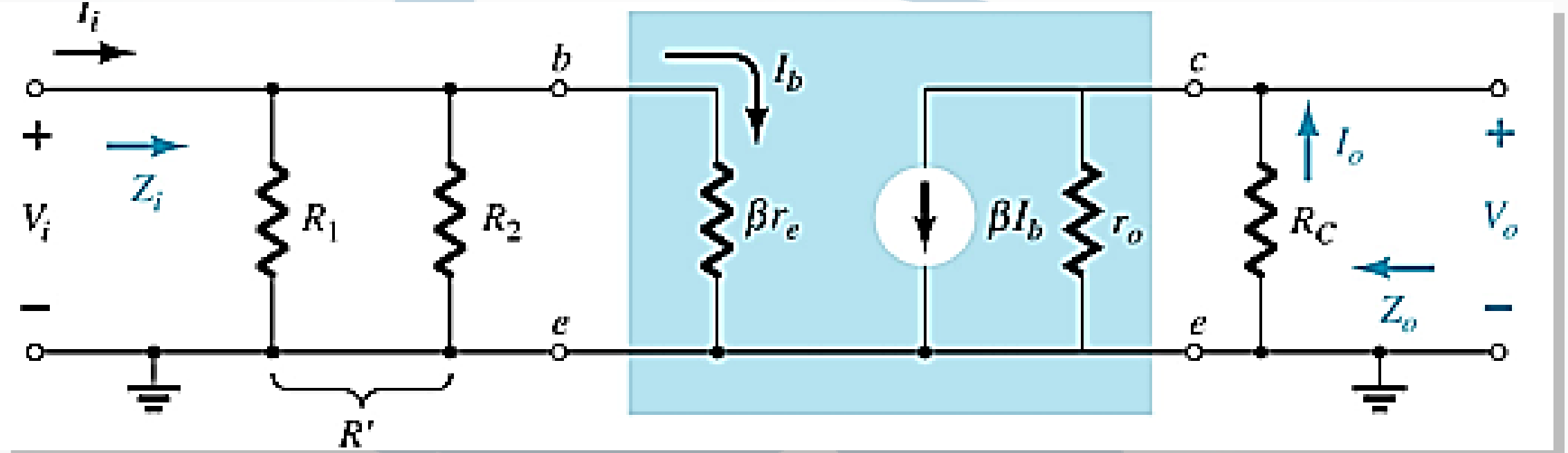

Input impedance:

$$R' = R_1 \parallel R_2$$

$$Z_i = R' \parallel \beta r_e$$

Output impedance:

$$Z_o = R_C \parallel r_o$$

$$Z_o \cong R_C \Big|_{r_o \geq 10R_C}$$

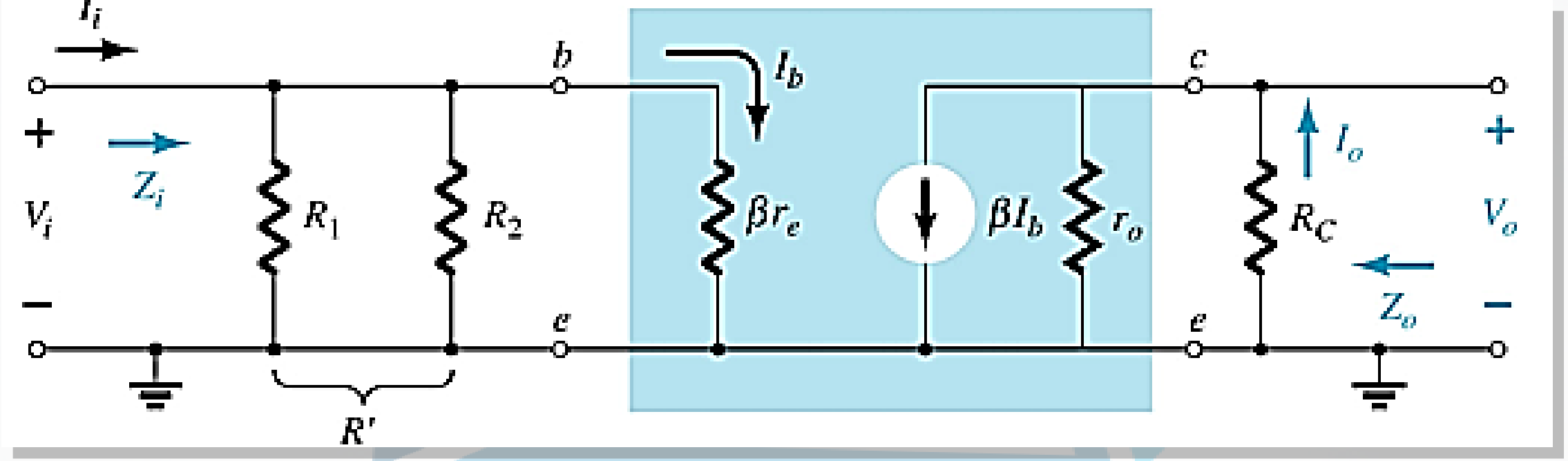

Voltage gain:

$$A_v = \frac{V_o}{V_i} = \frac{-R_C \parallel r_o}{r_e}$$

$$A_v = \frac{V_o}{V_i} \cong -\frac{R_C}{r_e}\Big|_{r_o \geq 10R_C}$$

Current gain from voltage gain:

$$A_i = -A_v \frac{Z_i}{R_C}$$

Current gain:

$$A_i = \frac{I_o}{I_i} = \frac{\beta R' r_o}{(r_o + R_C)(R' + \beta r_e)}$$

$$A_i = \frac{I_o}{I_i} \cong \frac{\beta R'}{R' + \beta r_e}\Big|_{r_o \geq 10R_C}$$

$$A_i = \frac{I_o}{I_i} \cong \beta\Big|_{r_o \geq 10R_C,\, R' \geq 10\beta r_e}$$

Common-Emitter Emitter-Bias Configuration

Equivalent Model

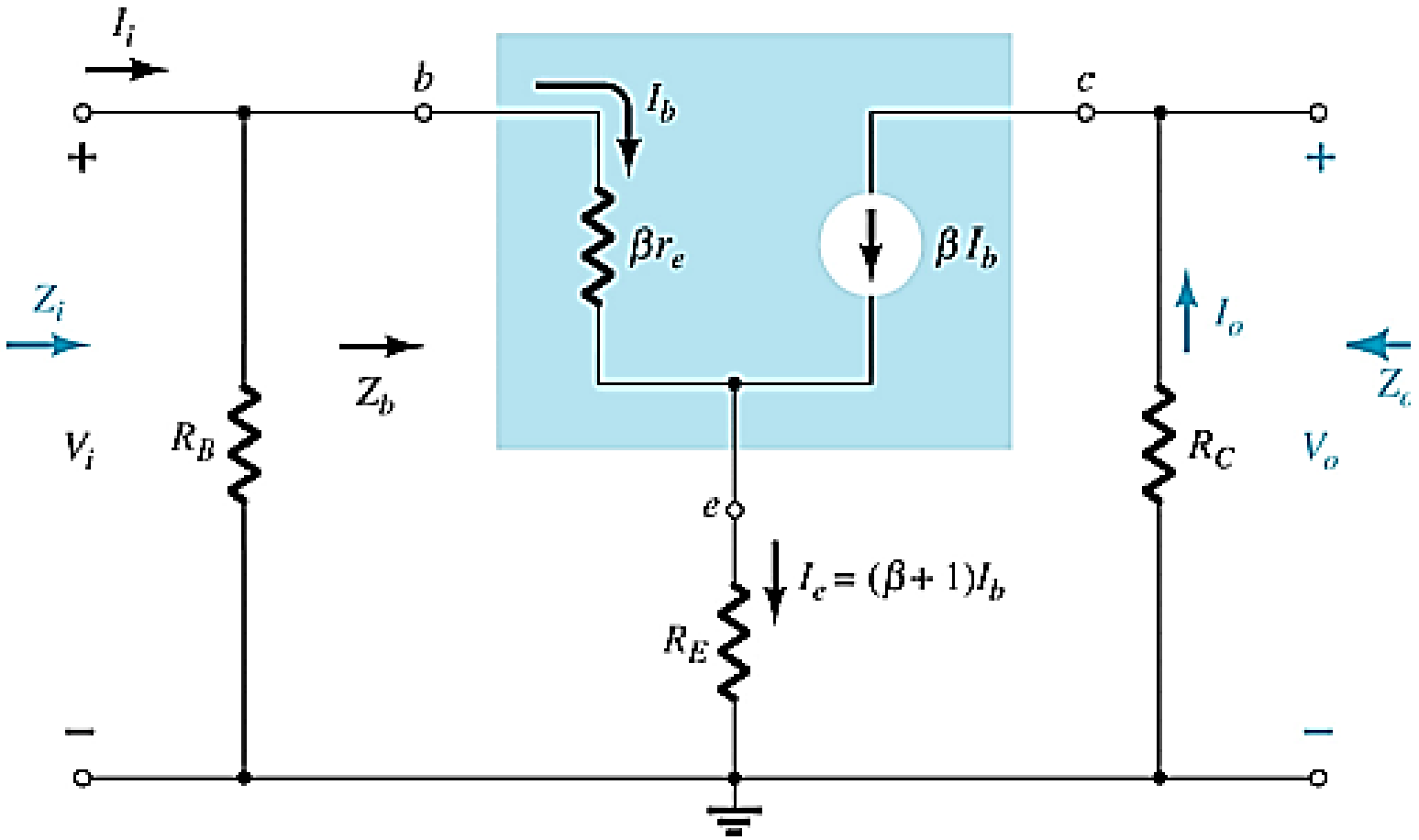

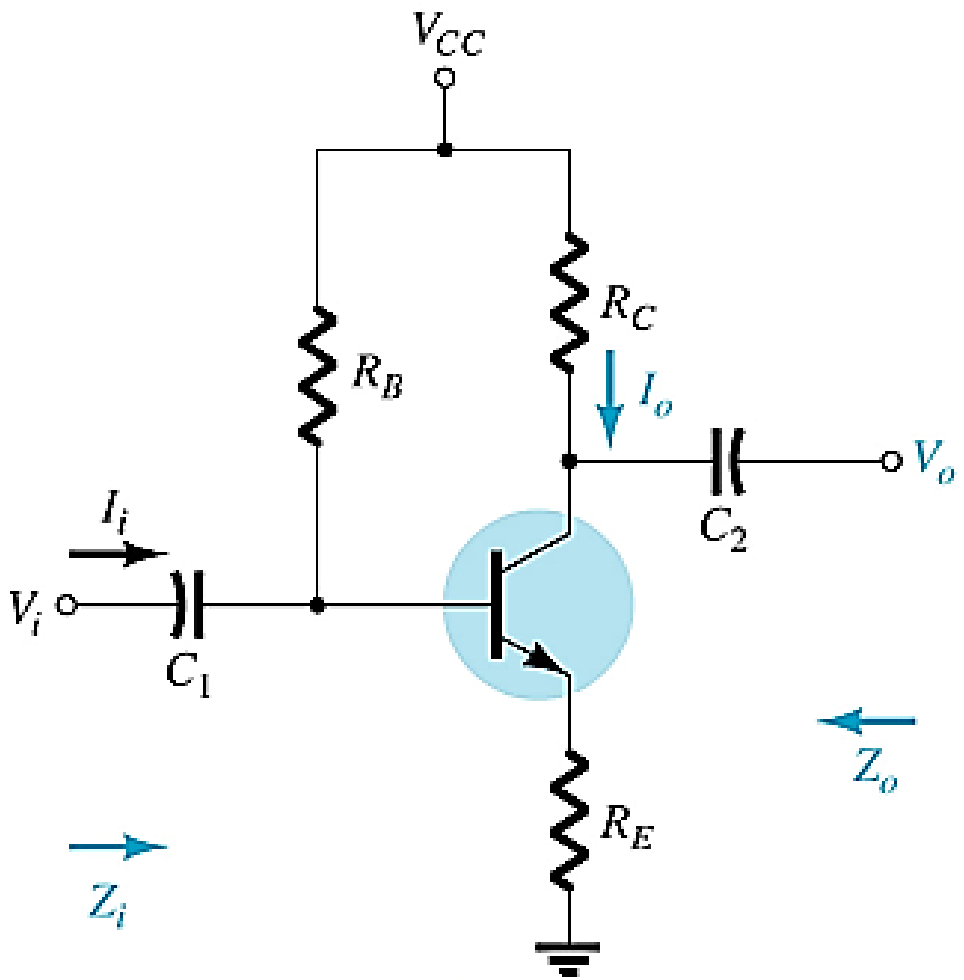

Emitter-Bias Configuration

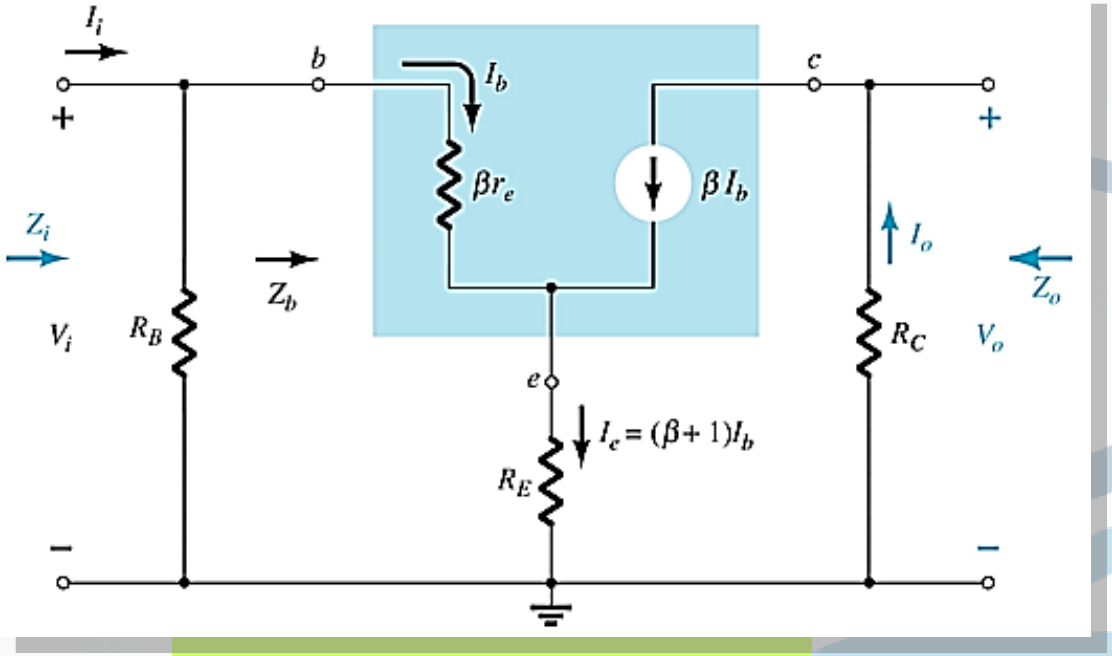

• Input impedance:

$$Z_i = R_B \parallel Z_b$$

$$Z_b = \beta r_e + (\beta + 1)R_E$$

$$Z_b \cong \beta(r_e + R_E)$$

$$Z_b \cong \beta R_E$$

• Voltage gain:

$$A_v = \frac{V_o}{V_i} = -\frac{\beta R_C}{Z_b}$$

$$A_v = \frac{V_o}{V_i} = -\frac{R_C}{r_e + R_E}\Bigg|_{Z_b = \beta(r_e + R_E)}$$

$$A_v = \frac{V_o}{V_i} \cong -\frac{R_C}{R_E}\Bigg|_{Z_b \cong \beta R_E}$$

• Output impedance:

$$Z_o = R_C$$

• Current gain:

$$A_i = \frac{I_o}{I_i} = \frac{\beta R_B}{R_B + Z_b}$$