المحاضرة التاسعة : تمارين الهيدروليك والكهروهيدروليك

د.نزار عبد الرحمن

Flow control valves

تستخدم من أجل تخفيض سرعة الاسطوانات أو عدد الدورات للمحرك .

حيث تعتمد هذه القيم على معدل التدفق.

مبدأ العمل : يؤدي تقليل مقطع التدفق للمقطع العرضي لصمامات التحكم بالتدفق إلى زيادة الضغط خلف هذا الصمام .

هذا الضغط يؤدي إلى فتح صمام حد الضغط ، وهذا يؤدي إلى تجزئة معدل التدفق ، حيث يذهب قسم من التدفق إلى عناصر الطاقة لتأمين سرعات الدورات للمحركات الدورانية ، أو إلى الاسطوانات لتأمين الحركة الخطية للمكابس . أما القسم الآخر من التدفق فيعود إلى الخزان عن طريق صمام حد الضغط ، وبالتالي ينتج فقدان ملموس في الطاقة .

- **flow control valves or**
- **flow regulating valves.**

أنواع صمامات التحكم بالتدفق

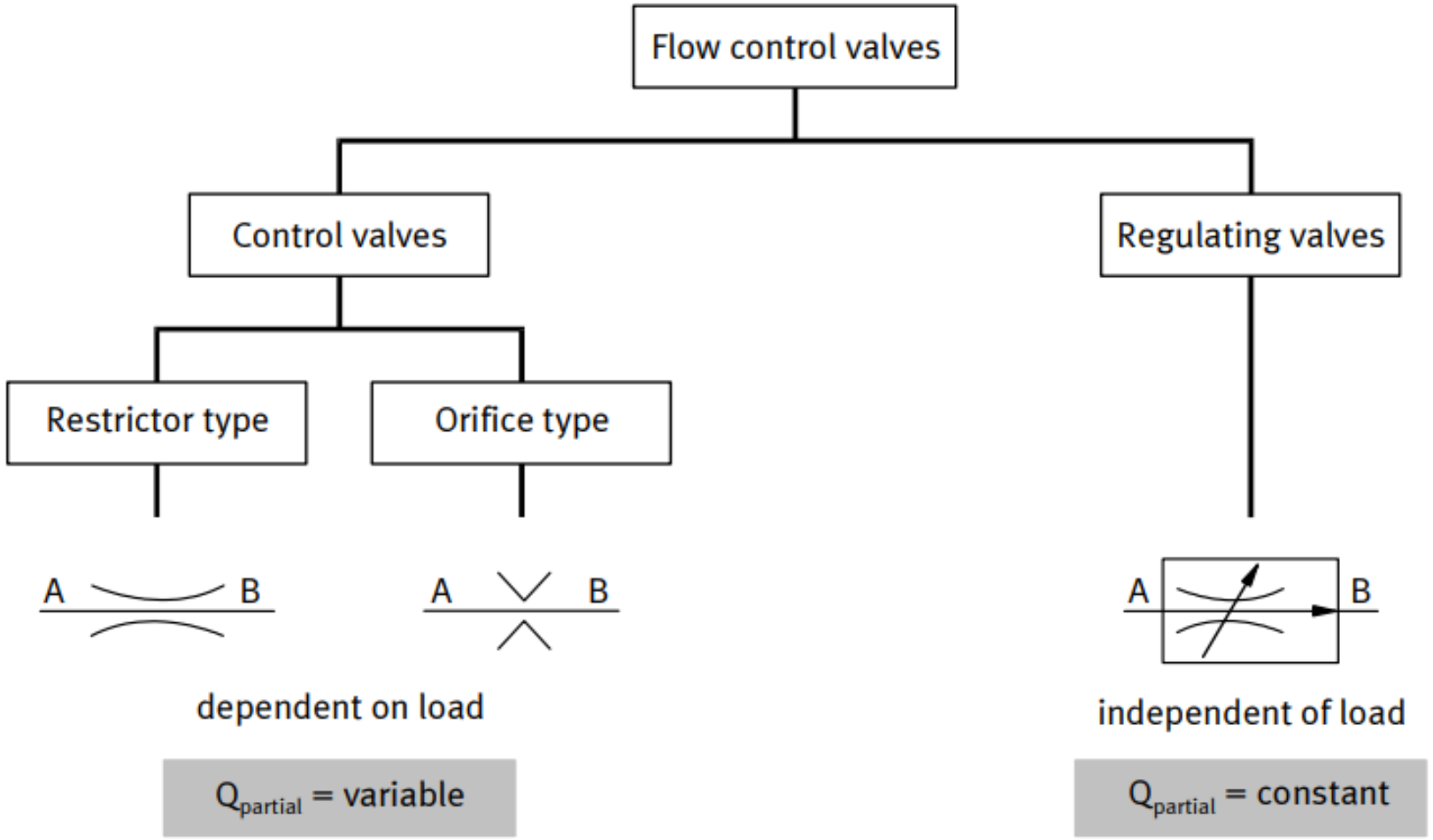

Restrictors and orifice valves

الصمامات الخانقة والبوابات

تمثل الخوانق والبوابات مقاومات للتدفق ، هذه المقاومة تعتمد على التدفق من خلال المقطع العرضي ، وعلى هندسية الشكل للخوانق ، وعلى لزوجة المائع .

عندما يعبر المائع من خلال الخانق يحدث انخفاض في قيمة الضغط نتيجة للاحتكاك وزيادة سرعة المائع .

عن طريق الاختيار المناسب لمقطع التدفق ، وزيادة سرعة التدفق ، تصبح المقاومة مستقلة عن اللزوجة ، ولهذا السبب تستخدم البوابات والخوانق بشكل مستقل عن درجة الحرارة واللزوجة (ساعات القياس)

تستخدم الخوانق والبوابات مع صمامات حد الضغط، ينتج عن ذلك زيادة في الضغط خلف الخانق ، عندها يفتح صمام حد الضغط عندما يكون الضغط المعاكس أعلى من قيمة الضغط لصمام حد الضغط .

ينتج عن ذلك تجزئة التدفق حيث يذهب قسم من تدفق المضخة إلى الأجهزة المستهلكة للطاقة ، والقسم الآخريعود إلى الخزان عن طريق صمام حد الضغط (فقدان طاقة).

يعتمد التدفق الجزئي الذي يعبر خلال الخانق على فرق الضغط.ΔP

يتناسب فرق الضغط طردا مع التدفق المستهلك .

يحافظ الضغط عند الدخل على قيم ثابتة نتيجة لوجود صمام حد الضغط .

يتغير فرق الضغط ΔP نتيجة لتغير الحمولة الآتية من الأجهزة المستهلكة ، ونتيجة لذلك يوجد تغير في معدل التدفق الذاهب إلى الأجهزة .

إذا من غير المناسب من الناحية العملية استخدام تدفق ثابت عند حالات تغير لحمولة .

العلاقة بين معدل التدفق المستهلك من الأجهزة وتغيّر الضغط هي :

$$\Delta p \sim Q^2_{\text{consuming device}}$$

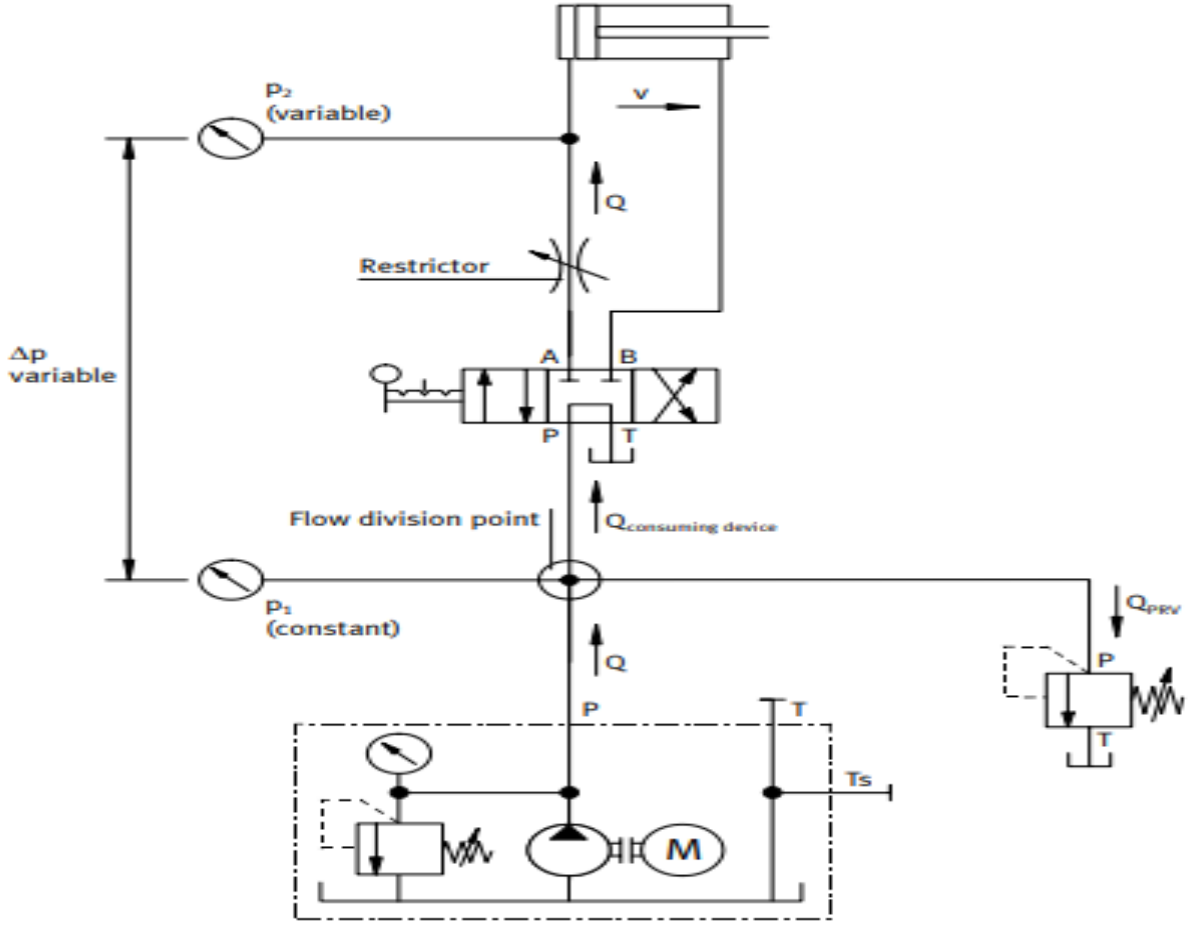

Exercise1 Hardening furnace

cover of a hardening furnace is to be raised by a single-acting cylinder. The cylinder is activated by a 3/2-way valve. A 9 kg weight is attached to the cylinder to represent the load. Measure and calculate the following values: ⍰ Travel pressure, load pressure, resistances and back pressure ⍰ Advance-stroke time and speed

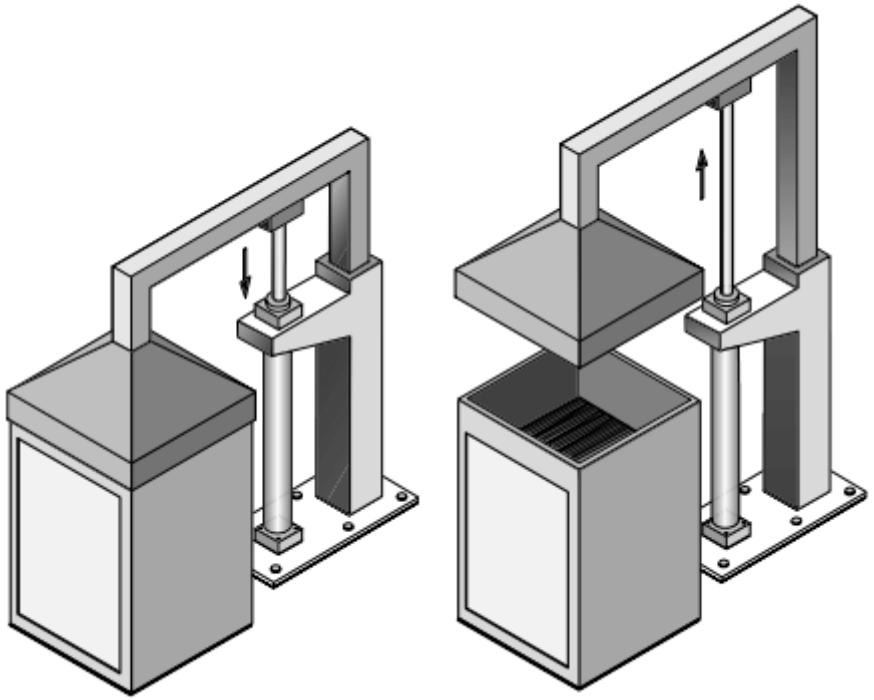

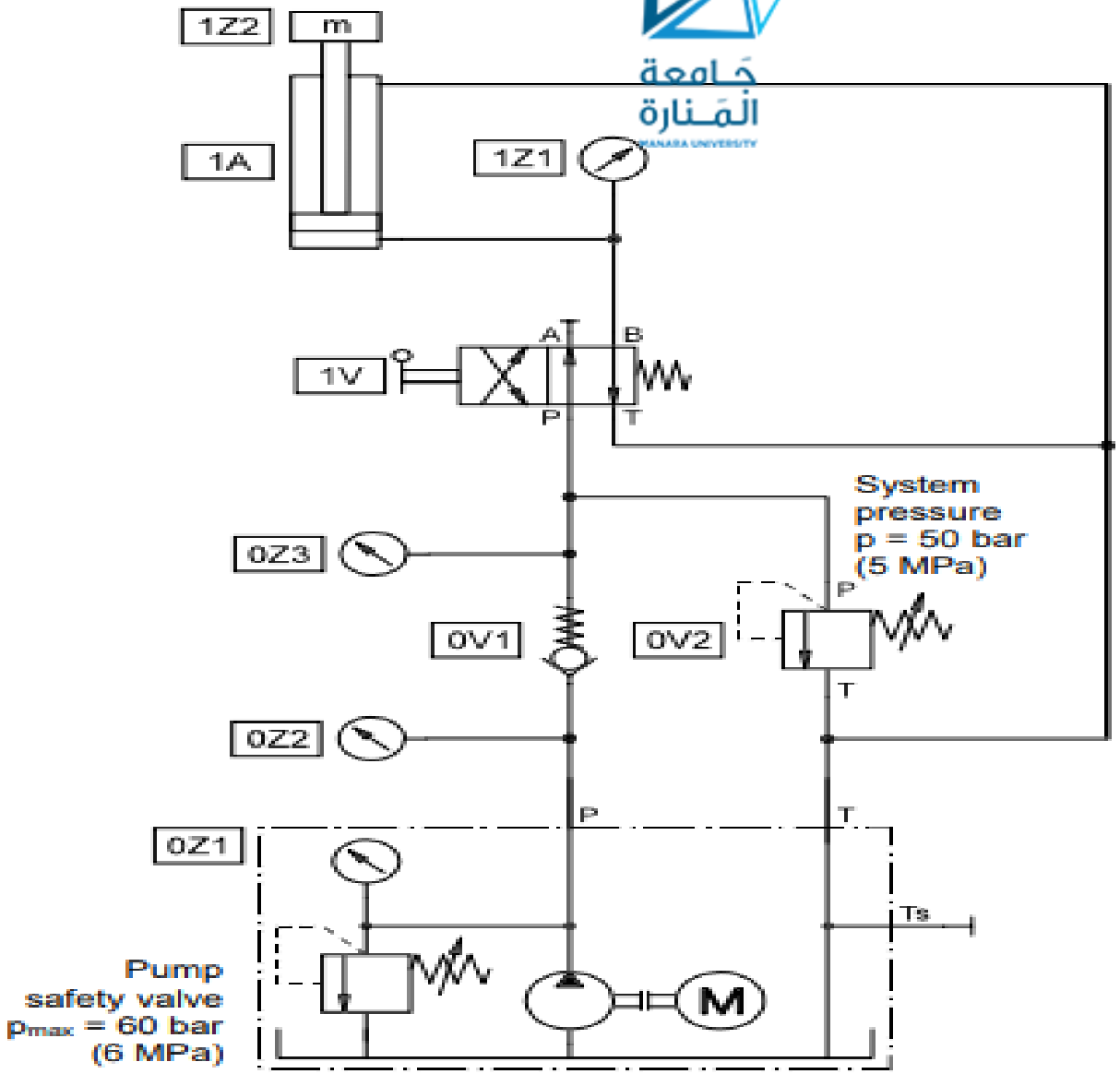
1Z2
m
1A
1Z1
1V
A
B
P
T
System
pressure
p = 50 bar
(5 MPa)
0Z3
0V1
0V2
P
T
0Z2
P
T
0Z1
Ts
Pump
safety valve
pmax = 60 bar
(6 MPa)
M

For this exercise, the cylinder is bolted onto the base plate on the left of the profile plate and loaded with the weight. When the cylinder is connected up, it is essential that the upper connection is connected to the tank. In place of a 3/2-way valve, a 4/2-way valve is now used, with one connection blanked off. Once the circuit has been assembled, the PRV 0V2 should first be fully opened. The hydraulic power pack should then be switched on and the PRV 0V2 slowly closed until the pressure gauge 0Z3 indicates 50 bar. The 4/2-way valve 1V can now be slowly reversed, which will cause the piston rod of the cylinder to advance. The design of the valve means that, as this is slowly reversed, the full cross-section of the valve is not immediately opened. Initially, the pump delivery to the cylinder will be throttled. As soon as the valve is returned to its initial position, the piston rod of the cylinder will return to its lower end position

Characteristic data required for calculation:

Applied load::	F_W =	90	N
Piston area:	A_{PN} =	2	cm^2
Stroke length:	s =	200	mm
Pump delivery:	q =	2	l/min

Load pressure: $$p_L = \frac{F_W}{A_{PN}} = \frac{90\ N}{2\ cm^2} = \frac{45\ N}{cm^2} = 4.5\ bar$$

Hydraulic resistance = Travel pressure - load pressure

$$p_{res} = 8\ bar - 4.5\ bar = 3.5\ bar$$

Conclusions

The back pressure is considerably lower than the hydraulic resistance. A cylinder motion can take place only if this case applies. The value of the back pressure depends on the hydraulic resistances. These are very low when fluid is discharged into the tank

Direction	*Travel pressure*	*Travel time*	*Evaluation*
Advance stroke	8 bar	1.1 s	
Return stroke	0 bar	1.4 s	

Advance-stroke speed: $v_{adv} = \frac{q}{A_{PN}} = \frac{2\frac{l}{min}}{2\ cm^2} = \frac{\frac{2000\ cm^3}{60\ s}}{2\ cm^2}$

$$v_{adv} = 16.67\frac{cm}{s} = 0.17\frac{m}{s}$$

Conclusions

Advance-stroke time: $t_{adv} = \frac{s}{v_{adv}} = \frac{0.2\ m}{0.17\frac{m}{s}} = 1.2\ s$

Measured advance-stroke time, 1.1 s., is slightly less than the calculated time. The reason for this may be that the delivery of a new pump is somewhat greater than 2 l/min.

hydraulics

Exercise2 Furnace door control

A furnace door is opened and closed by a double-acting cylinder. The cylinder is activated by a 4/2-way valve with spring return. This ensures that the door opens only as long as the valve is actuated. When the valve actuating lever is released, the door closes again.

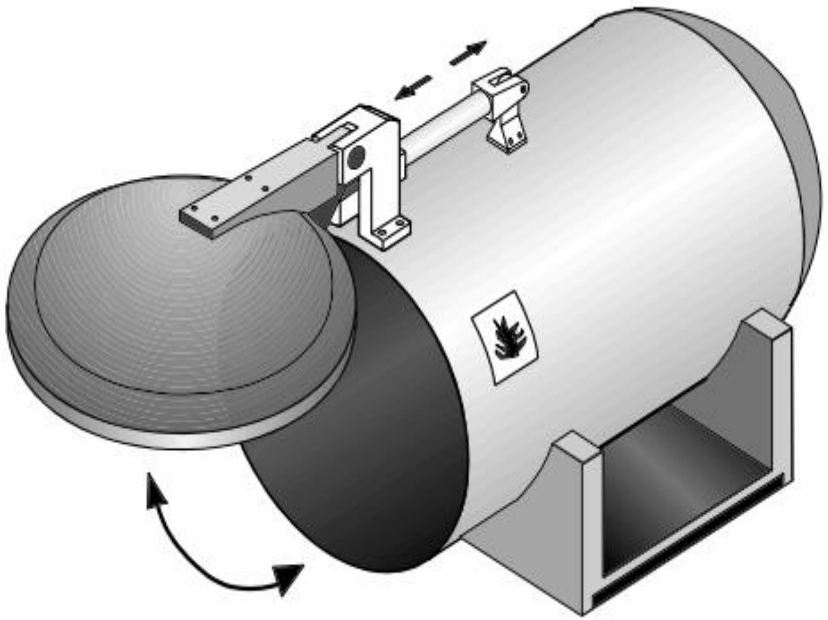

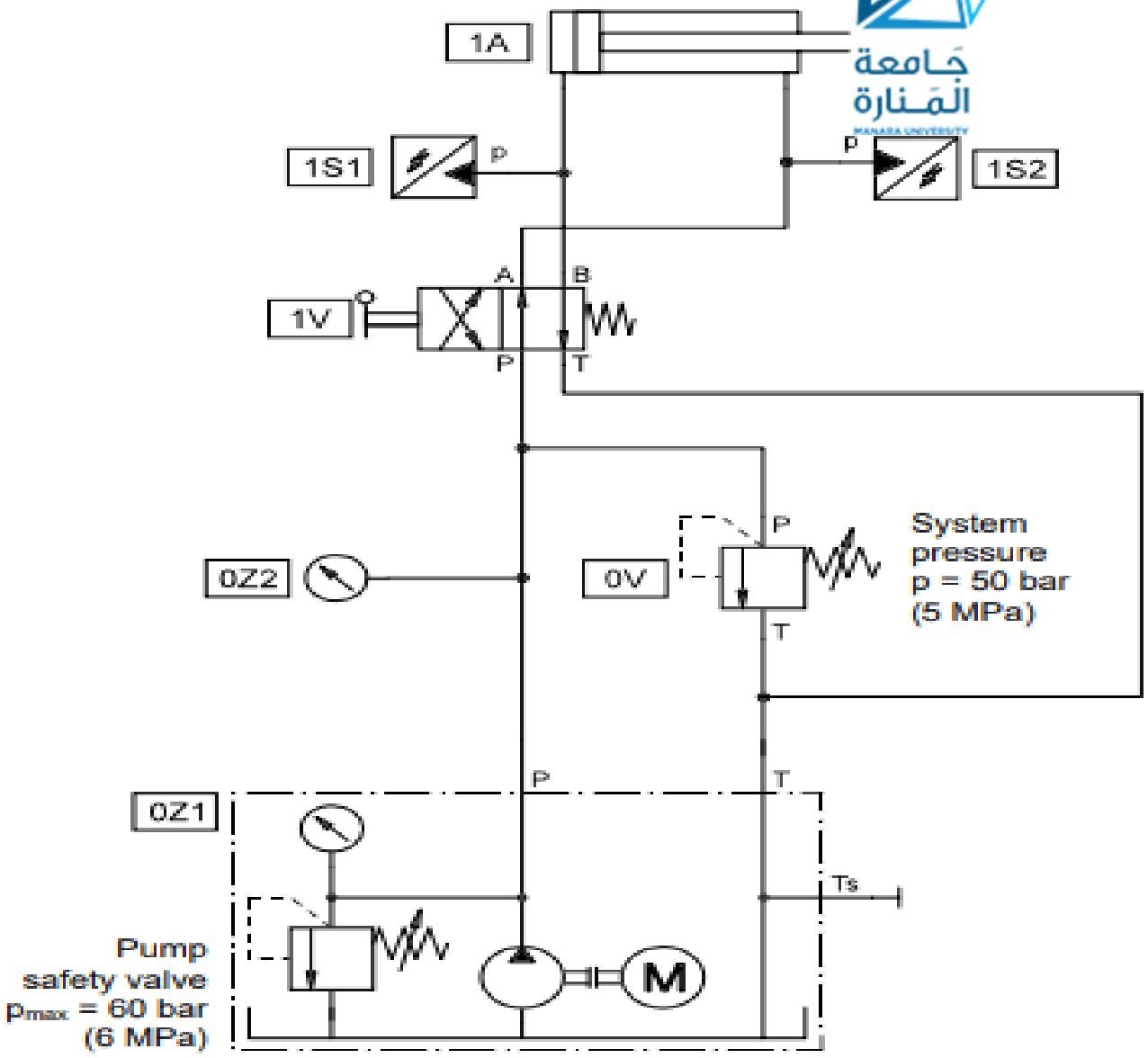
1A
1S1
p
p
1S2
1V
A
B
P
T
0Z2
0V
P
T
System
pressure
p = 50 bar
(5 MPa)
0Z1
P
T
Ts
M
Pump
safety valve
pmax = 60 bar
(6 MPa)

Once the circuit has been assembled and checked, the hydraulic power pack should be switched on and the system pressure set on the pressure relief valve 0V to 50 bar. Pressure sensors should be used to measure the travel and back pressures. When the hand lever of the 4/2-way valve is actuated, the piston rod of the cylinder will advance until the lever is released or the piston rod runs against the stop. When the lever is released, the piston rod will immediately return to its retracted end position. Before the pressures and times are measured, the piston rod should be advanced and retracted several times to expel any air which may have entered the piston-rod chamber during the previous exercises.

القياسات التجريبية

Advance stroke	Travel pressure p_{1S1}	Back pressure p_{1S2}	Travel time t_{adv}	Evaluation
→	2.4 bar	2 bar	1.2 s	
Return stroke	**Back pressure p_{1S1}**	**Travel pressure p_{1S2}**	**Travel time t_{ein}**	
←	5.3 bar	11 bar	0.8 s	

Characteristic data required for calculation:

Piston area:	A_{PN}	=	2.0	cm^2
Piston annular area:	A_{PR}	=	1.2	cm^2
Stroke length:	s	=	200	mm
Pump output:	q	=	2	l/min

Area ratio: $$\alpha = \frac{A_{PN}}{A_{PR}} = \frac{2\ cm^2}{1.2\ cm^2} = 1.667$$

Advance-stroke speed: $$v_{adv} = \frac{q}{A_{PN}} = \frac{2\frac{l}{min}}{2\ cm^2} = \frac{\frac{2000\ cm^3}{60\ s}}{2\ cm^2}$$

$$V_{adv} = 16.67\frac{cm}{s} = 0.17\frac{m}{s}$$

Advance-stroke time: $t_{adv} = \frac{s}{v_{adv}} = \frac{2\ m}{0.17\frac{m}{s}} = 1.2\ s$

Return-stroke time: $t_{ret} = \frac{s}{v_{ret}} = \frac{0.2\ m}{0.28\frac{m}{s}} = 0.7\ s$

Return-stroke speed: $v_{ret} = \frac{q}{A_{PR}} = \frac{2\frac{l}{min}}{1.2\ cm^2} = \frac{\frac{2000\ cm^3}{60\ s}}{1.2\ cm^2}$

$v_{ret} = 27.78\frac{cm}{s} = 0.28\frac{m}{s}$

Travel speed ratio: $\frac{V_{adv}}{V_{ret}} = \frac{0.17\frac{m}{s}}{0.28\frac{m}{s}} = 0.6$

Travel time ratio: $\frac{t_{adv}}{t_{ret}} = \frac{1.2\ s}{0.7\ s} = 1.7$

Exercise3 Painting booth

An endless chain conveyor feeds workpieces through a painting booth. The chain is driven by a hydraulic motor via a right-angle gear unit. Due to changes in the production process, the weight of the workpieces passing through the painting booth has changed. The speed of the conveyor should, however, remain the same as before. It must be determined whether this can be achieved by fitting a flow control valve, and if so which type is suitable.

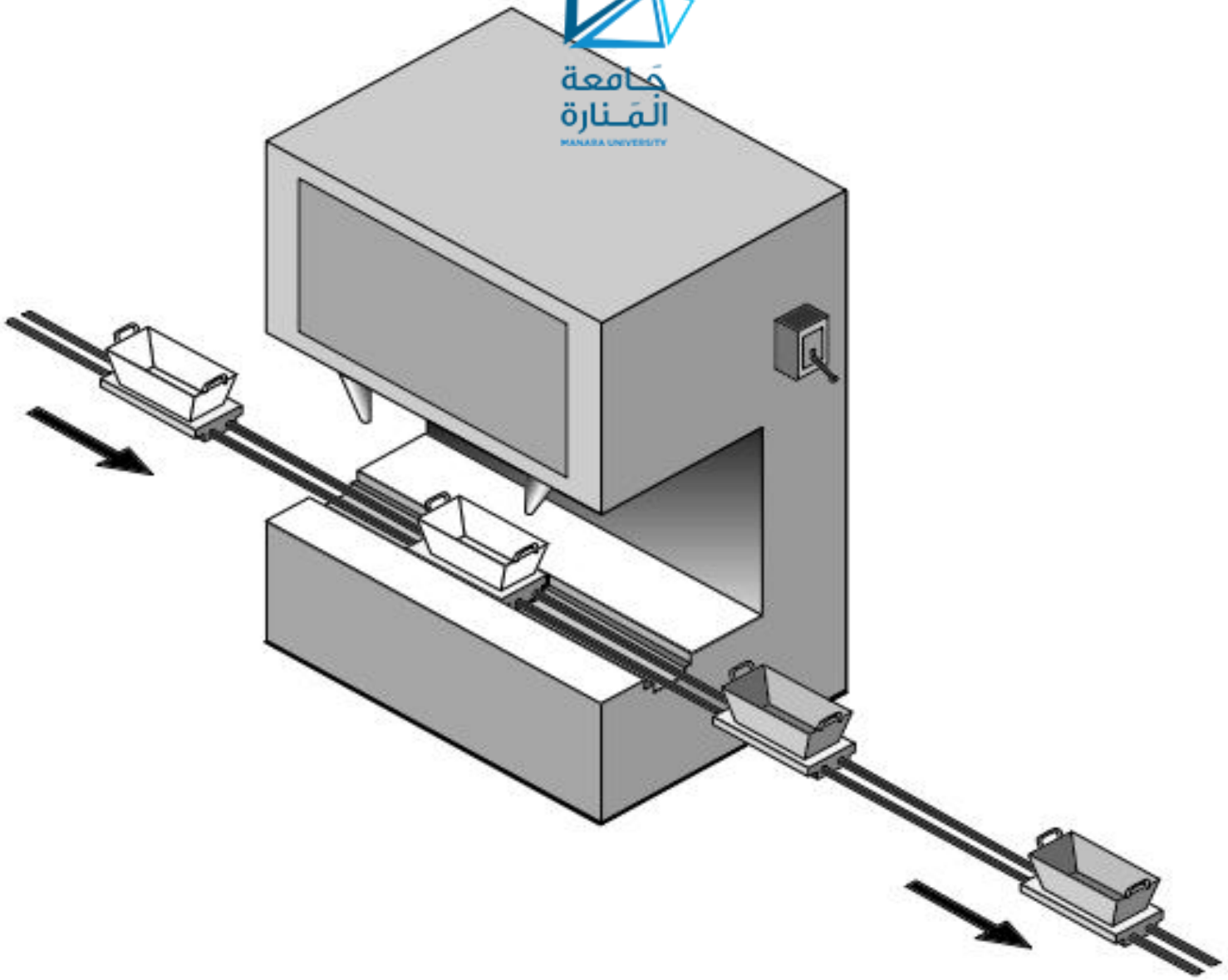

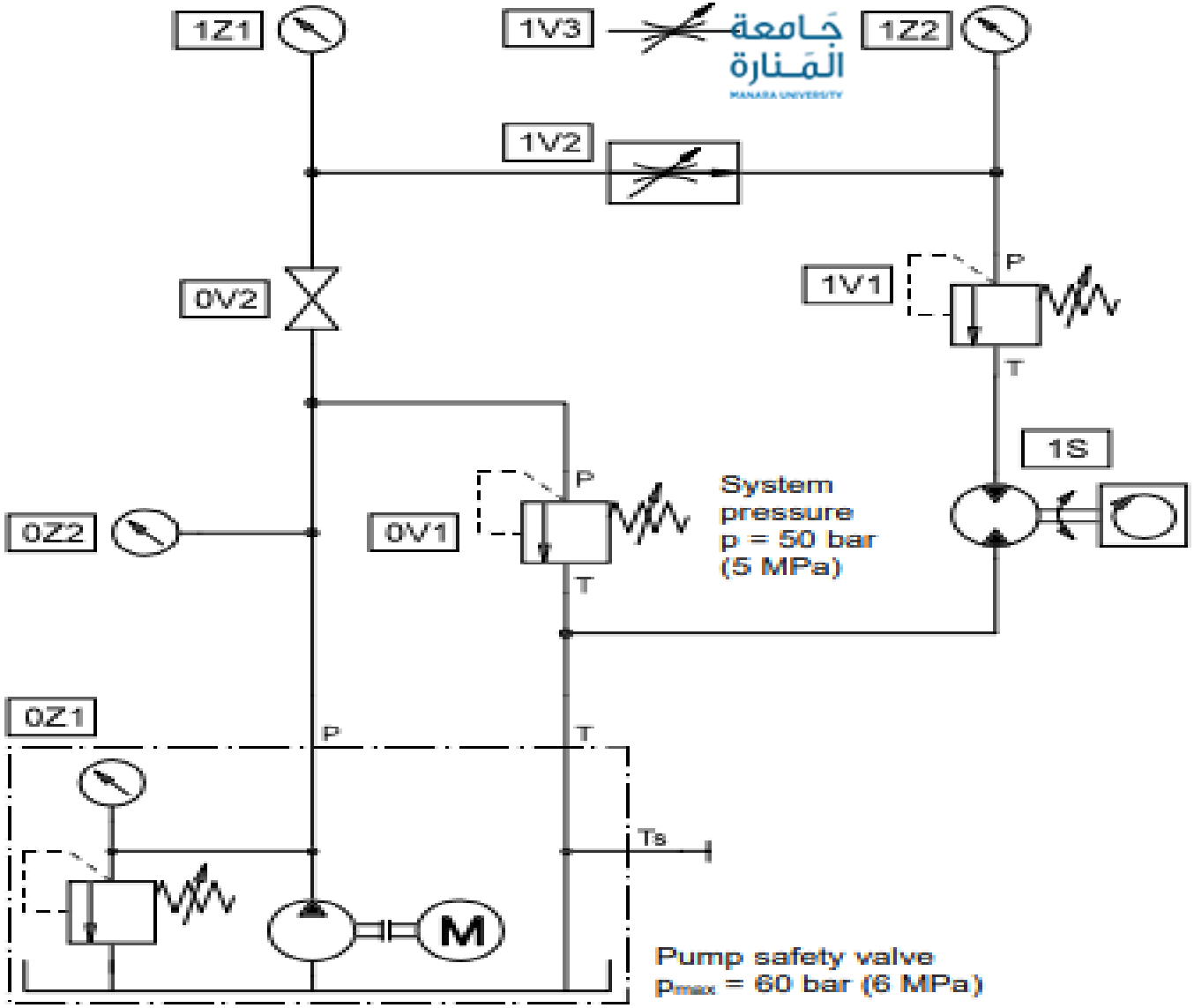
1Z1
1V3
1Z2
1V2
0V2
1V1
P
T
1S
0Z2
0V1
P
T
System
pressure
p = 50 bar
(5 MPa)
0Z1
P
T
Ts
M
Pump safety valve
pmax = 60 bar (6 MPa)

Assemble and check the circuit in accordance with the circuit diagram. Fully open the pressure relief valves 0V1 and 1V1 and close the shut-off valve 0V2. Open the flow control valve 0Z2 approx. 2 turns. The hydraulic power pack can now be switched on. The system pressure of 50 bar required for the exercise should be set on the pressure relief valve 0V1 and checked on the pressure gauge 0Z2. Now open the shut-off valve 0V2. If the pressure gauge 1Z1 shows less than 50 bar, re-adjust the pressure relief valve 0V1 slightly. The flow control valve 0V2 can now be set to the desired flow rate of 2 l/min. The load pressure should be varied by means of the pressure relief valve 1V1 in accordance with the specified values. For the second half of the measurements, the pressure relief valve 1V1 should be fully opened and the system pressure varied by means of the pressure relief valve 0V1. The system pressure/flow rate characteristic for the flow control valve can then be plotted

Conclusions

p_{1Z1}	p_{1Z2}	q_{SRV}	q_{DV}
50 bar	10 bar	2 l/min	2 l/min
50 bar	20 bar	2 l/min	1.8 l/min
50 bar	30 bar	2 l/min	1.3 l/min
50 bar	40 bar	2 l/min	0.7 l/min
50 bar	50 bar	1.2 l/min	0.1 l/min

Fluctuating load pressure

Fluctuating inlet pressure

p_{1Z1}	p_{1Z2}	q_{FCV}	q_{TV}
50 bar	10 bar	2 l/min	2 l/min
40 bar	10 bar	2 l/min	1.6 l/min
30 bar	10 bar	2 l/min	1.3 l/min
20 bar	10 bar	2 l/min	0.8 l/min
10 bar	10 bar	1.5 l/min	0.4 l/min

Conclusions

Only the flow control valve offers a suitable means of setting a constant speed with different pressures. In the case of the throttle valve, the flow rate varies as a function of pressure. Reason: In the case of the flow control valve, the built-in pressure compensator keeps the pressure difference constant. This gives a constant flow rate, which can then be adjusted with a throttle valve. Operation of the pressure compensator does, however, require a certain minimum pressure. The throttle valve is a simple restrictor, which produces a flow rate as a function of the pressure difference

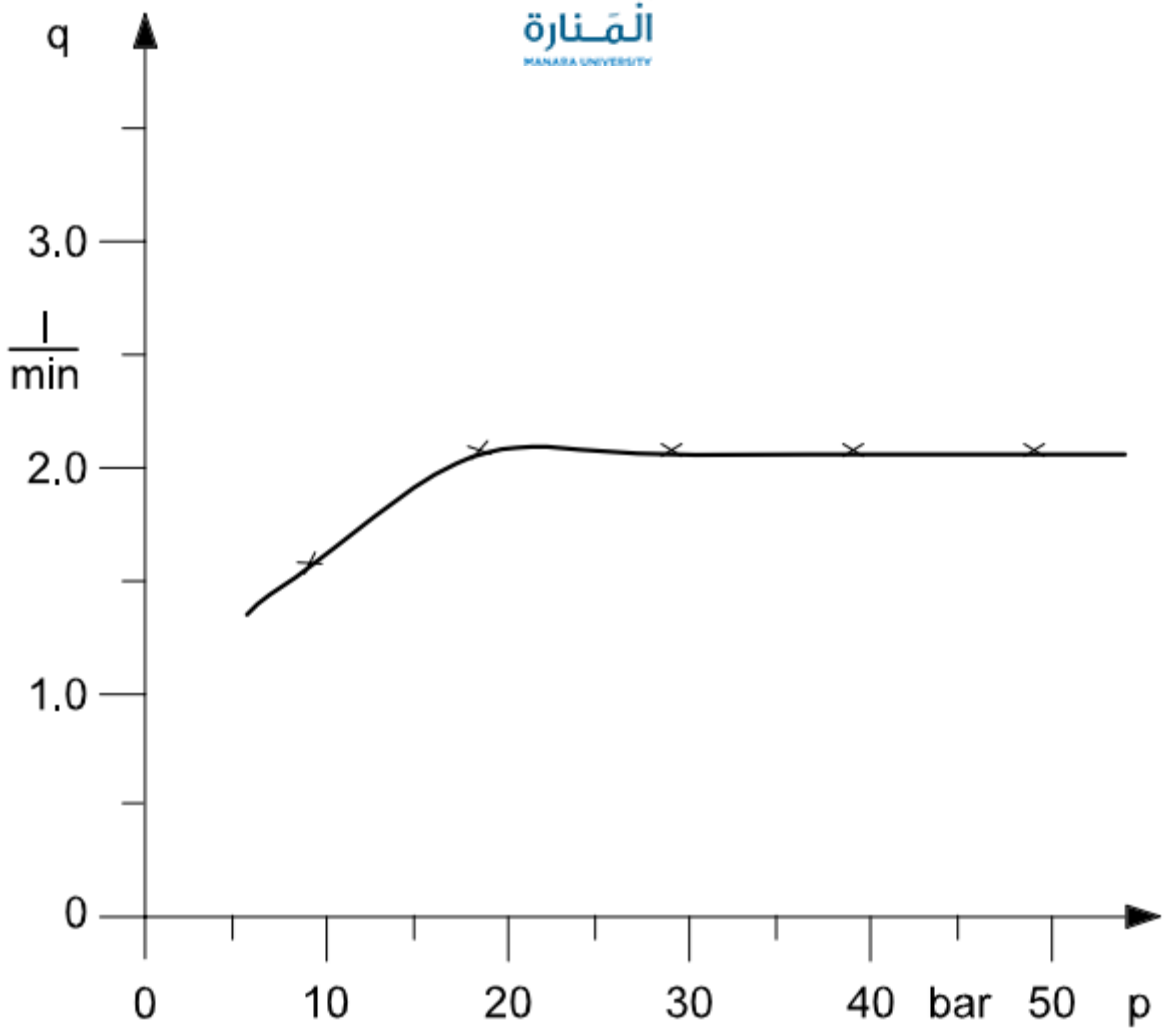
q
3.0
l/min
2.0
1.0
0
0
10
20
30
40
bar
50
p

نتيجة :

تؤمن صمامات التحكم بالتدفق ضبط مناسب للسرعات الثابتة مع اختلاف قيم الضغط .

في حالة الصمامات الخانقة ، يكون تغير معدل التدفق تابعا لتغير الضغط .

السبب :

في حالة صمامات التحكم بالتدفق ، يحافظ صمام تعويض الضغط على فرق ضغط ثابت ، وهذا يعطي معدل تدفق ثابت ، حيث يمكن بعد ذلك ضبط معدل التدفق عن طريق الصمام الخانق .

الصمامات الخانقة عبارة عن موانع بسيطة تعطي معدل تدفق كتابع لفرق الضغط .

Exercise4

Surface grinding machine

The grinding table of a surface grinding machine is driven by a hydraulic cylinder. Since the speed is required to be the same in both directions, the hydraulic control circuit must be designed to provide compensation for the difference in volume of the two cylinder chambers. A differential circuit is suggested with a 3/2-way valve and a flow control valve for speed adjustment

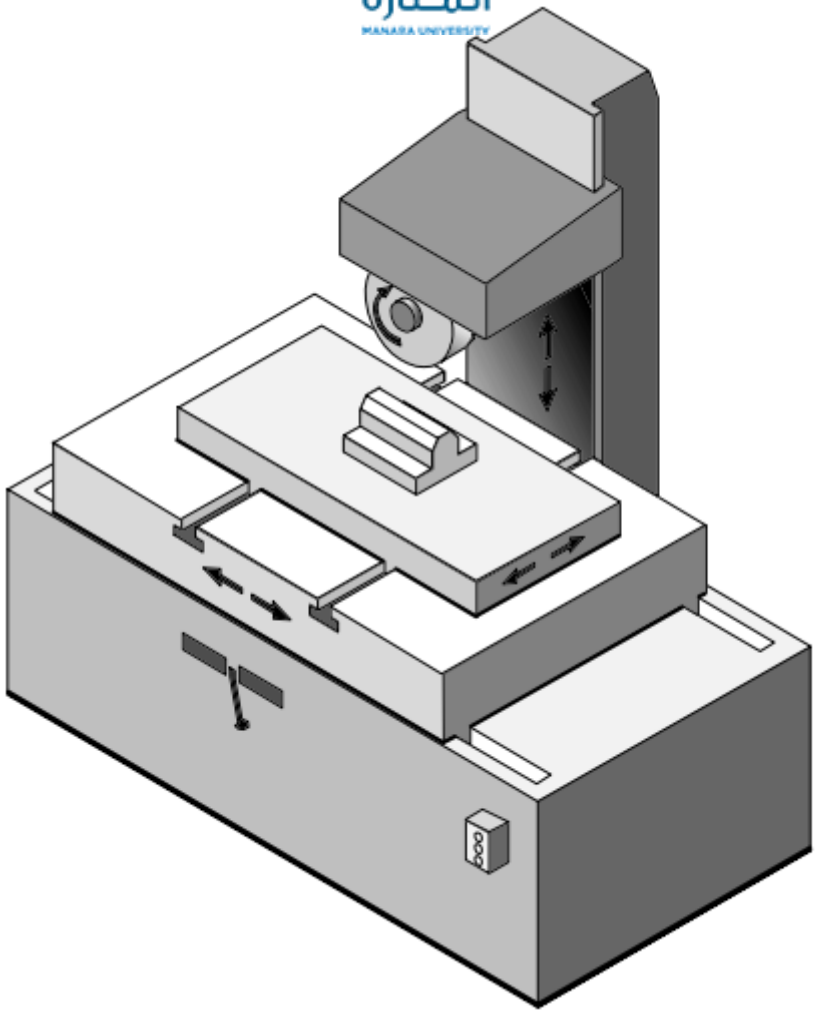

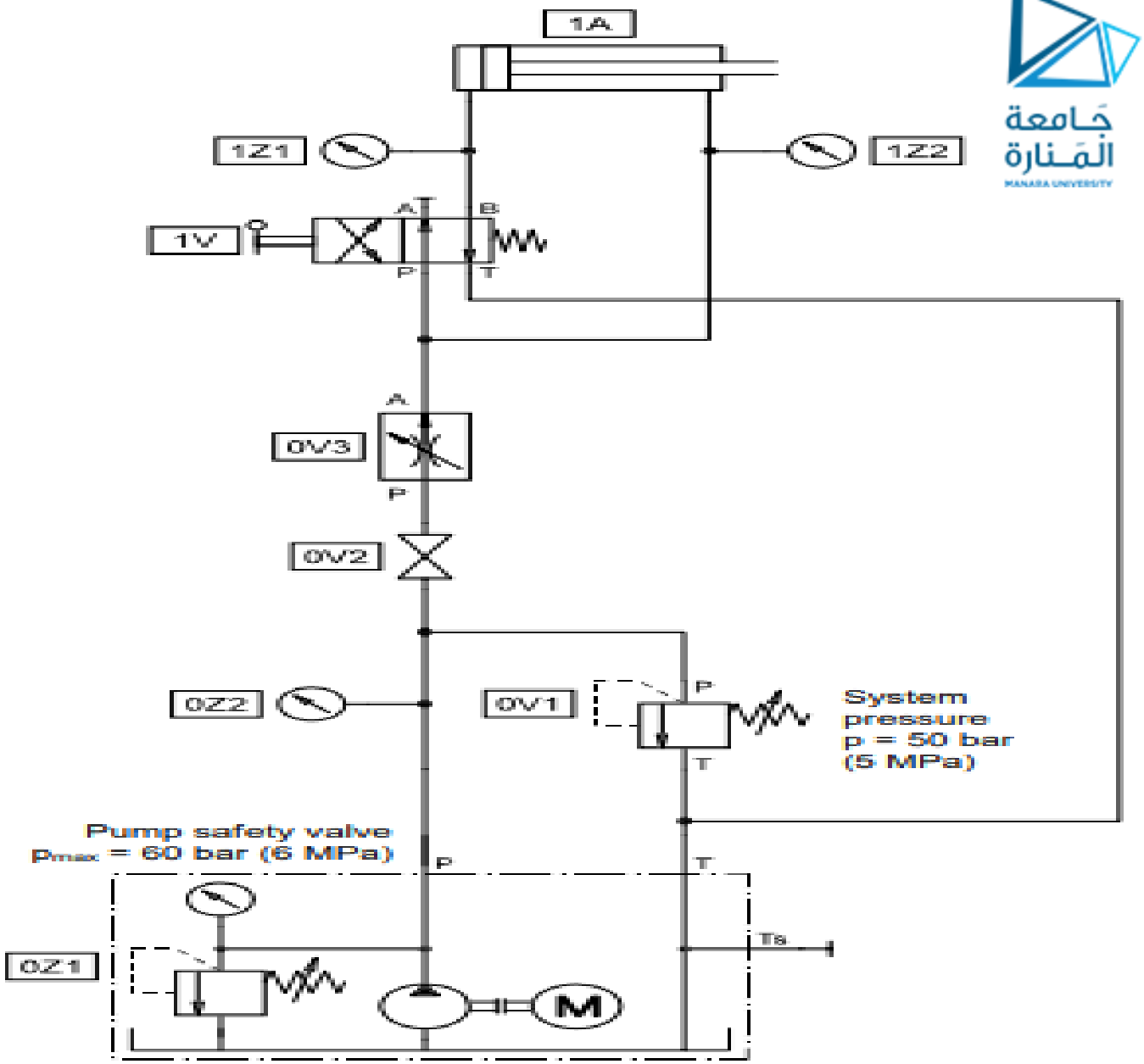
1A
1Z1
1Z2
1V
A
B
P
T
0V3
A
P
0V2
0Z2
0V1
P
T
System
pressure
p = 50 bar
(5 MPa)
Pump safety valve
pmax = 60 bar (6 MPa)
P
T
Ts
0Z1
M

Assemble and check the circuit. Close the shut-off valve 0V2 and the flow control valve 0V3. Now switch on the hydraulic power pack and set a system pressure of 50 bar by means of the pressure relief valve 0V1. Now open the shut-off valve 0V2 and also open the flow control valve until the piston rod advances. The measurements can now be carried out

Evaluation

p_{1Z1} = Pressure on piston side of cylinder

p_{1Z2} = Pressure on annular piston side of cylinder

p_{0Z2} = System pressure = 50 bar

$t \rightarrow$ = Cylinder advance-stroke time approx. 4 s

Values table

Direction	p_{1Z1}	p_{1Z2}	t
Advance stroke	3.5 bar	5 bar	4.31 s
Return stroke	0 bar	4.5 bar	6.57 s

Cylinder dimensions:

Piston area: $A_{PN} = 2.0 \ cm^2$

Annular piston area: $A_{PR} = 1.2 \ cm^2$

Cylinder stroke: $s = 0.2 \ m$

Area ratio: $\alpha = \frac{A_{PN}}{A_{PR}} = \frac{2 \ cm^2}{1.2 \ cm^2} = 1.67 \approx 1.7$

Time ratio: $\frac{t_{adv}}{t_{ret}} = \frac{4.31 \ s}{6.57 \ s} = 0.656$

Force ratio: $\frac{F_1}{F_2} = \frac{A_{PN} \cdot p_{12,1}}{A_{PR} \cdot p_{12,2}} = \frac{2 \ cm^2 \cdot 3.5 \ bar}{1.2 \ cm \cdot 5 \ bar} = 1.2 < \alpha$

Flow rate during advance stroke:

Piston side: $q_{PN} = A_{PN} \cdot \frac{s}{t_{adv}} = 2 \ cm^2 \cdot \frac{20 \ cm}{4.31 \ s}$

$q_{PN} = 9.28 \frac{cm^3}{s} = 557 \frac{cm^3}{min} \approx 0.6 \frac{l}{min}$

Annular piston side: $q_{PR} = A_{PR} \cdot \frac{s}{t_{adv}} = 1.2 \ cm^2 \cdot \frac{20 \ cm}{4.31 \ s}$

$q_{PR} = 5.57 \frac{cm^3}{s} = 334 \frac{cm^3}{min} \approx 0.3 \frac{l}{min}$

Exercise5 Embossing machine

A special machine is used to emboss graphic symbols on metal foil. The foil is fed through the embossing machine with an adjustable cycle time. The downward motion of the stamp must be capable of being varied in accordance with the feed speed. The return motion must always be executed as a rapid traverse. A one-way flow control valve is used to control the speed of the stamp, while a pressure relief valve is used to prevent the weight of the stamp from pulling the piston rod out of the cylinder. A 4/2-way valve is used to switch between upwards and downwards motion

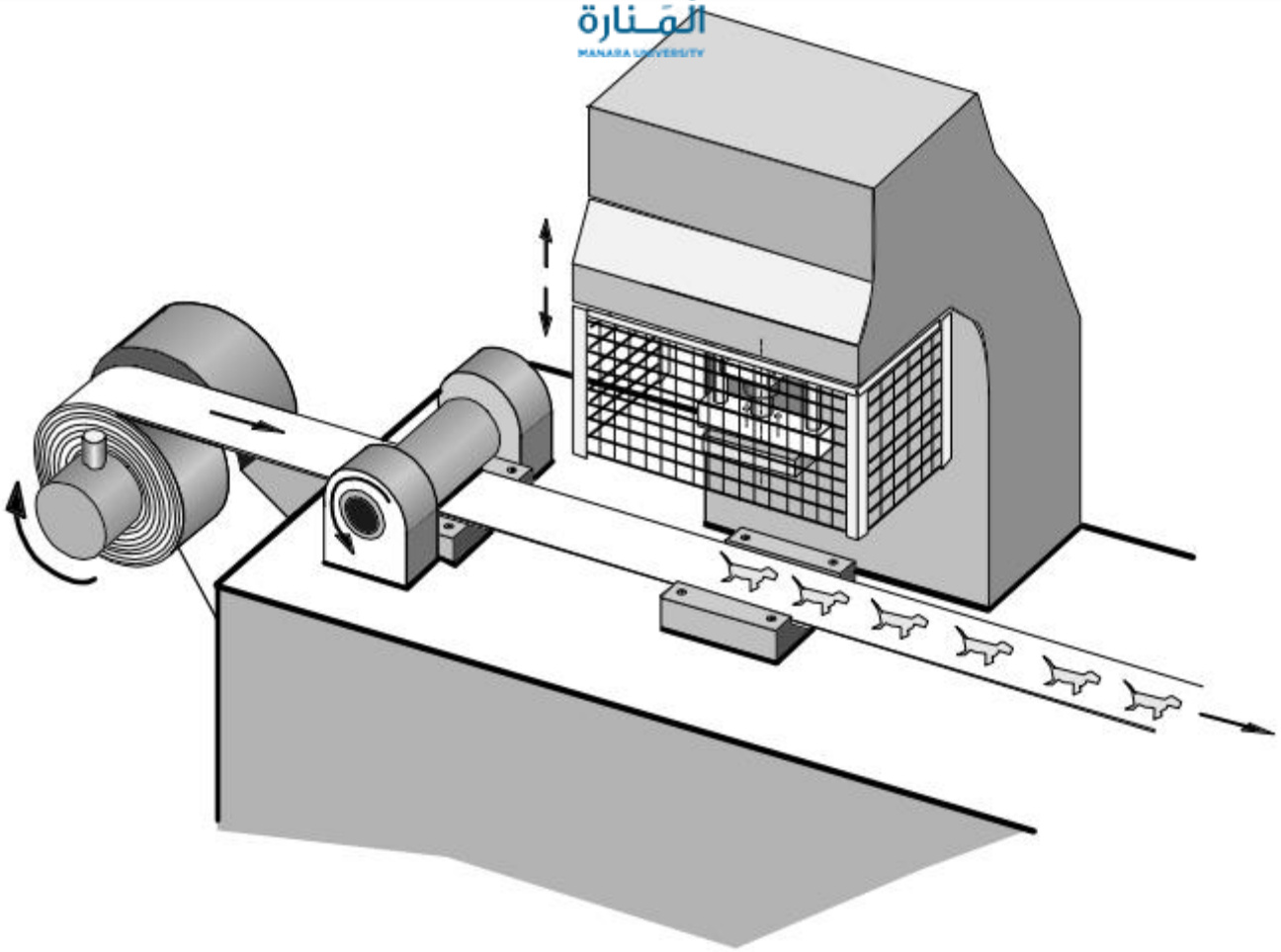

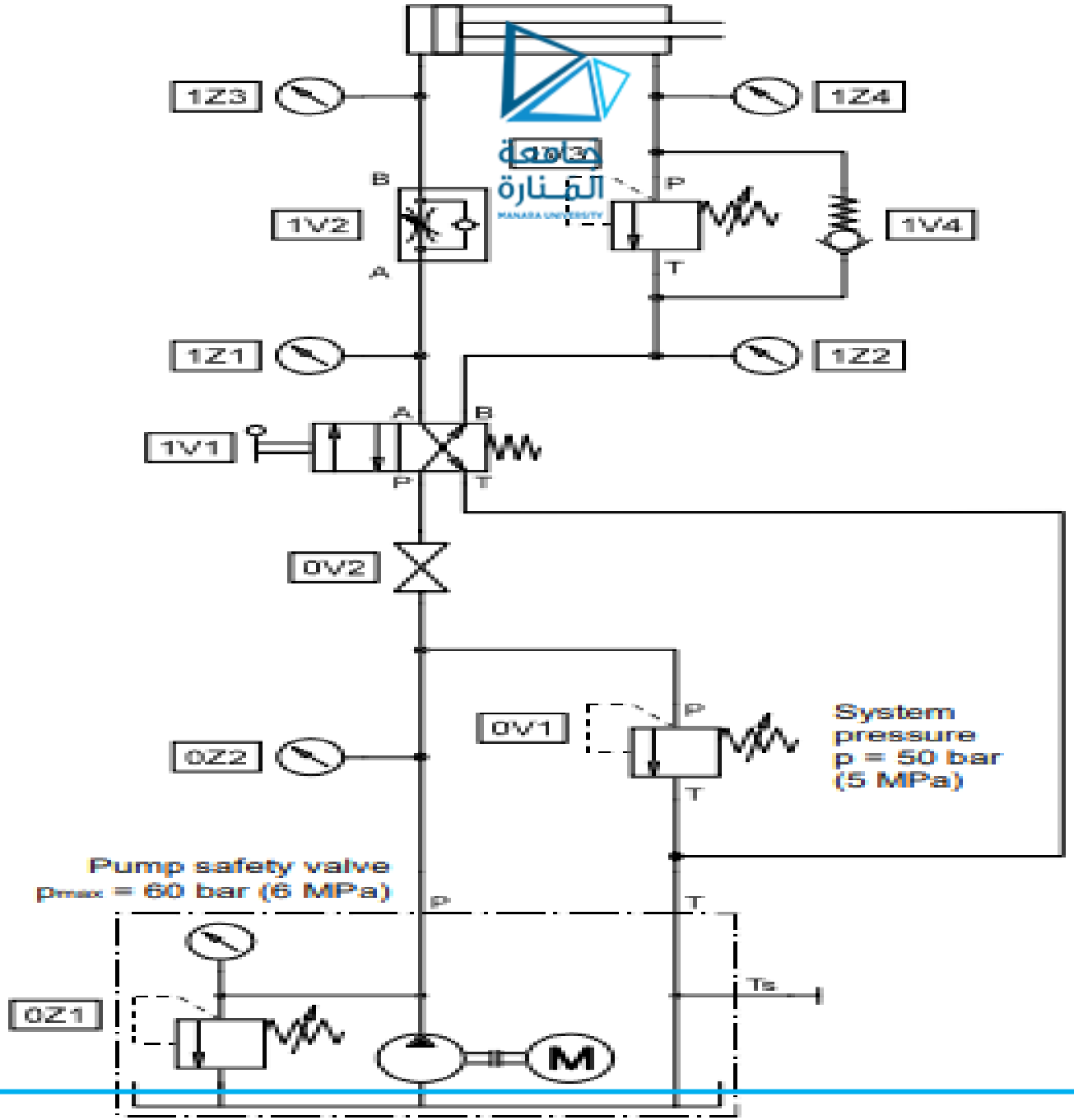
1Z3
1Z4
B
P
1V2
1V4
A
T
1Z1
1Z2
A
B
1V1
P
T
0V2
0V1
P
System
pressure
p = 50 bar
(5 MPa)
0Z2
T
Pump safety valve
pmax = 60 bar (6 MPa)
P
T
Ts
0Z1
M

في حالة وجود دارة هيدروليكية مع صمام خانق ،تنخفض سرعة الحركة عند تخفيض ضغط الدخل ، وكذلك عند زيادة الضغط المعاكس (المقاوم) .

في حالة دارة هيدروليكية مع صمام تحكم بالتدفق تبقى السرعة ثابتة .

السبب :

في حالة الصمامات الخانقة يتغير فقط مقطع التدفق للأنبوب الذي يعبر فيه المائع ، ويكون معدل التدفق الناتج تابعا لقيم فرق الضغط العالي والمنخفض للخانق ،

إذا يكون معدل التدفق خلال الخانق تابعا للضغط ، لكل من جهة التزويد وجهة ضغط الحمولة .

يحافظ صمام التحكم بالتدفق مع تعويض الضغط على ثبات قيمة فرق الضغط الداخلي ،ولذلك يكون معدل التدفق غير معتمد على ضغط التزويد وضغط الحمولة .

Flow rate during return stroke:

Annular piston side: $q_{PR} = A_{PR} \cdot \frac{s}{t_{ret}} = 12\ cm^2 \cdot \frac{20\ cm}{6.57\ s}$

$$q_{PR} = 3.65\ \frac{cm}{s} = 219\ \frac{cm^3}{min} = 0.2\ \frac{l}{min} = q_{FCV}$$

Conclusions

If the same pressure acts on a larger area (APN), this produces a larger force (F1). Mathematical proof:

Mathematical proof:

Given $p_{\ell 1} = p_{\ell 2}$

and $p_{\ell 1} = \frac{F_1}{A_{PN}}$ und $p_{\ell 2} = \frac{F_2}{A_{PR}}$

we optain $\frac{F_1}{F_2} = \frac{A_{PR}}{A_{PR}} = \alpha$

it follows: $F_1 = \alpha \cdot F_2$

Since $\alpha > 1$, $F_1 > F_2$, and the cylinder advances.

The lower travel pressure p1Z1 acts on the larger area APN, producing a greater force F1. Only when the ratio of travel pressure to back pressure becomes equal to the area ratio a is an equilibrium of forces achieved, causing the piston to stop. Mathematical proof:

$$\frac{F_1}{F_2} = \frac{A_{PN} \cdot p_{1Z1}}{A_{PR} \cdot p_{1Z2}}$$

Für $F_1 = F_2$

gilt $$\frac{p_{1Z2}}{p_{1Z1}} = \frac{A_{PN}}{A_{PR}} = \alpha$$

As long as $\frac{p_{1Z2}}{p_{1Z1}} < \alpha$, the piston will advance.

The available cylinder force is:

$$F = F_1 - F_2 = (A_{PN} \cdot p_{1Z1}) - (A_{PR} \cdot p_{1Z2})$$

$$F = (2\ cm^2 \cdot 3.5\ bar) - (1.2\ cm^2 \cdot 5\ bar)$$

$$F = (7\ kp - 6\ kp) = 1\ kp = 10\ N$$

Exercise1 :Crates arriving on a conveyor belt must be raised to the height of a packing conveyor by means of a lifting table. The raising and lowering of the lifting table are to be controlled manually by means of a single-acting hydraulic cylinder. The advance stroke is adjustable, while the return stroke cannot be adjusted and is governed by the weight of the lifting table. The pressure should be measured upstream of the cylinder and of the directional control valve

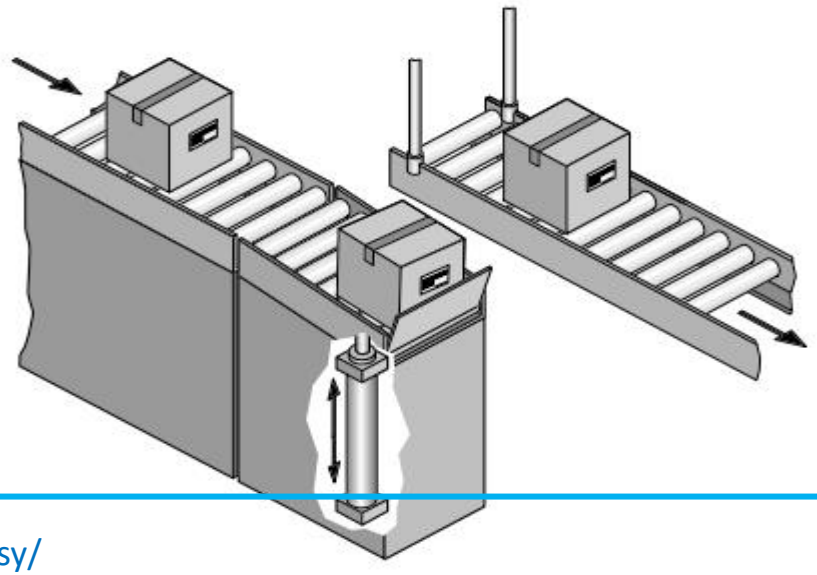

Practical assembly, hydraulic

Components list, hydraulic

Item no.	Qty.	Description
0Z1	1	Hydraulic power pack, 2 l/min
0Z2, 1Z1	2	Pressure gauge
0V	1	Pressure relief valve
1V1	1	4/2-way solenoid valve
1V2	1	One-way flow control valve
1A	1	Cylinder, 16/10/200
1Z2	1	Loading weight, 9 kg
-	3	Branch tee
-	7	Hose line with quick-release coupling, 600 and 1000

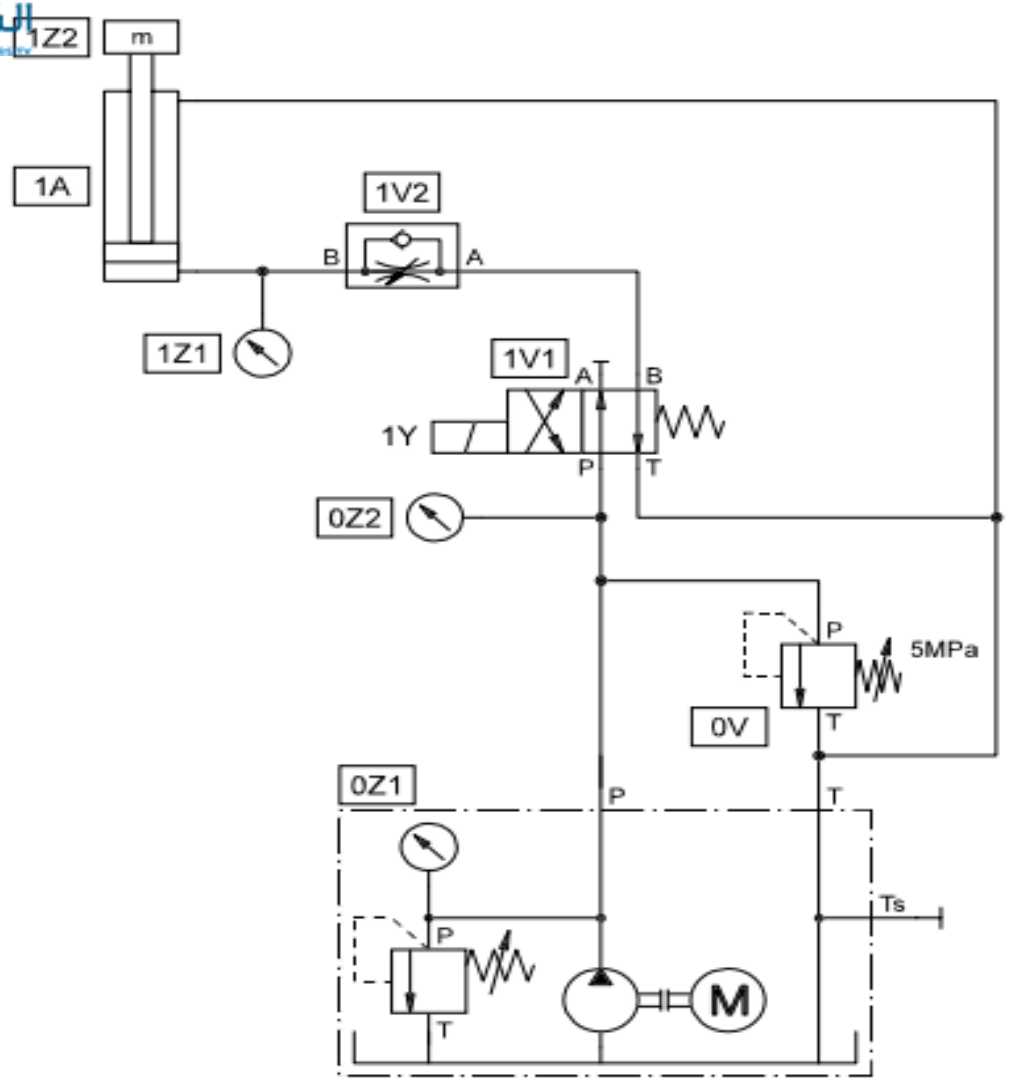

Solution description

When the START pushbutton S1 is pressed, the relay K1 is energised. The normally-open contact K1 supplies current to the solenoid coil 1Y of the 3/2-way solenoid valve. The piston rod now advances. When the pushbutton S1 is released, the circuit with K1 and 1Y is interrupted, the valve closes by spring force and the piston rod retracts due to the loading weight. The advance-stroke speed can be adjusted by means of the one-way flow control valve

Practical assembly, electrical

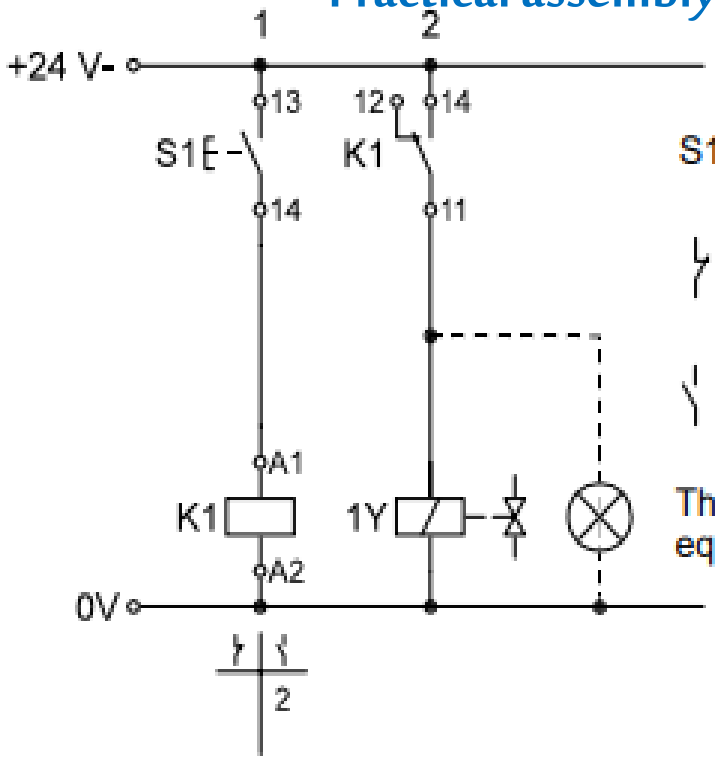

S1 = START pushbutton

= Normally-closed contact

= Normally-opened contact

The indicator and distributor unit equipped with indicator lamps

Contact allocation on relay pane

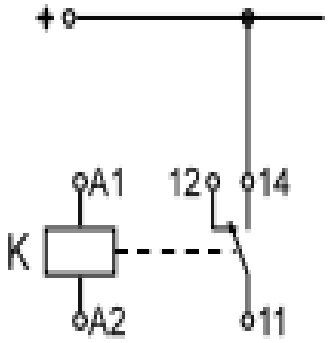

Changeover contact connected as normally-open contact

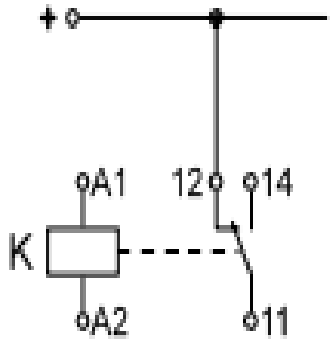

Changeover contact connected as normally-closed contact

Components list, electrical

Qty.	*Description*
1	Relay, 3-fold
1	Signal input unit, electrical
1	Indicator and distributor panel, electrical
1	Cable set, universal with safety plugs
1	Electrical power supply unit, 24V

Exercise2 Bending device

A bending device with a double-acting cylinder is used to produce U shaped sheet-metal work pieces. The start signal for this operation is given by a pushbutton. After the workpiece has been shaped, a second pushbutton is used to initiate the return stroke of the cylinder. No provision will be made in this exercise for the safety devices required in normal practice. The advance and return strokes must be executed at a slow adjustable speed. What type of flow control valve should you use to allow the speed to be adjusted independently of load?

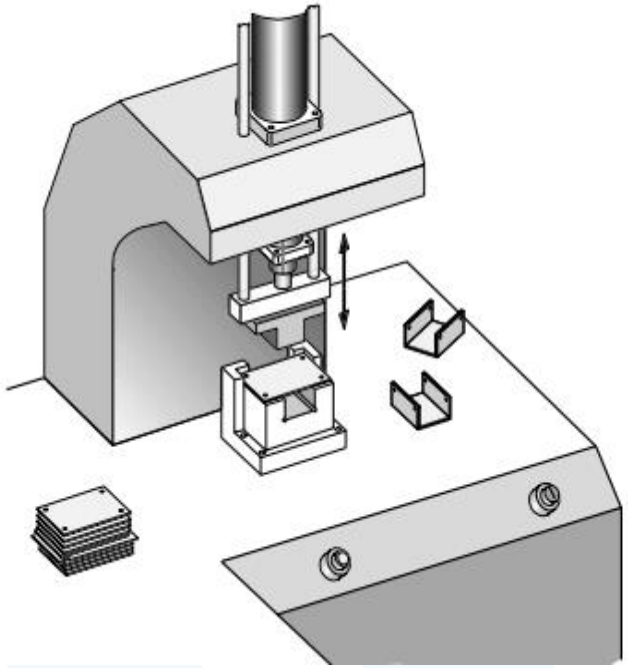

Practical assembly, hydraulic

Item no.	Qty.	Description
0Z1	1	Hydraulic power pack, 2 l/min
0Z2, 1Z	2	Pressure gauge
0V1	1	Pressure relief valve
0V2	1	2-way flow control valve
1V	1	4/2-way solenoid valve
1A	1	Cylinder, 16/10/200
-	2	Branch tee
-		Hose line with quick-release coupling, 600 and 1000

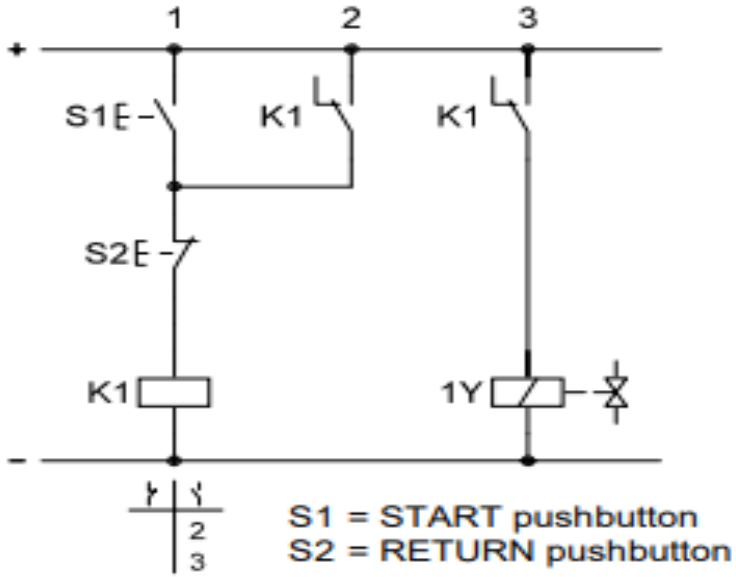

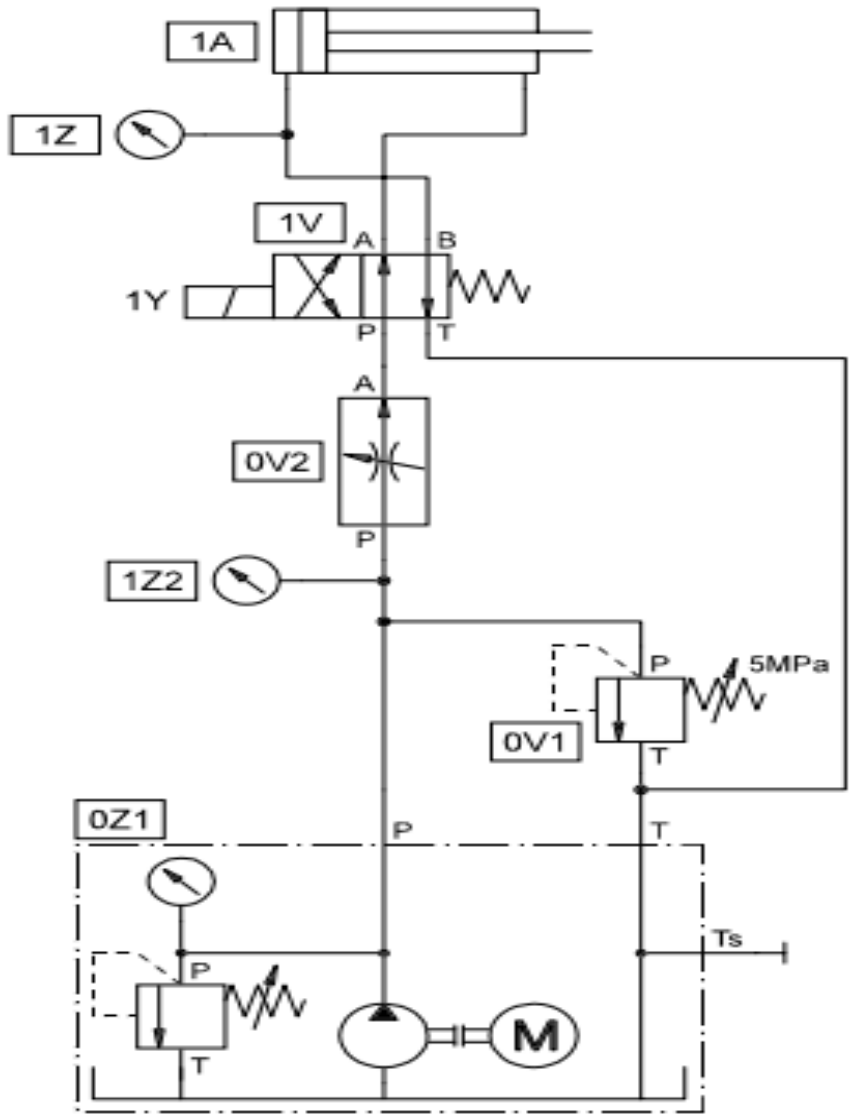

Solution description

When the START pushbutton S1 is pressed, the relay K1 is energised; the normally-open contact of K1 latches to maintain the power supply for the relay K1. Simultaneously, current is fed to the coil 1Y via a further contact of K1. The solenoid reverses the 4/2-way solenoid valve and the piston rod advances and remains at its forward end position until the RETURN pushbutton S2 is pressed, which interrupts the circuit for the relay K1. This also causes the circuit for the coil 1Y to be interrupted, and the piston rod returns to its initial position. A flow control valve must be fitted to ensure that the speed does not vary as a function of load. This flow control valve should be fitted upstream of the directional control valve and will then control both the advance and return strokes .

Electrohydraulic Exercise3: Press-fitting device

A press-fitting device is to be used to assemble workpieces. If the preset press pressure is exceeded (for example, because workpieces are incorrectly aligned), the piston rod must be retracted for safety reasons. After a correct press-fitting operation, the return stroke should be initiated when the value preset on the pressure switch of 3 MPa (30 bar) is reached. A one-way flow control valve is fitted in the supply line of the cylinder. Describe the point in time after the circuit is switched on at which the pressure switch is triggered if the pressure is measured upstream of the throttle valve.

What is the correct point at which to measure the pressure?

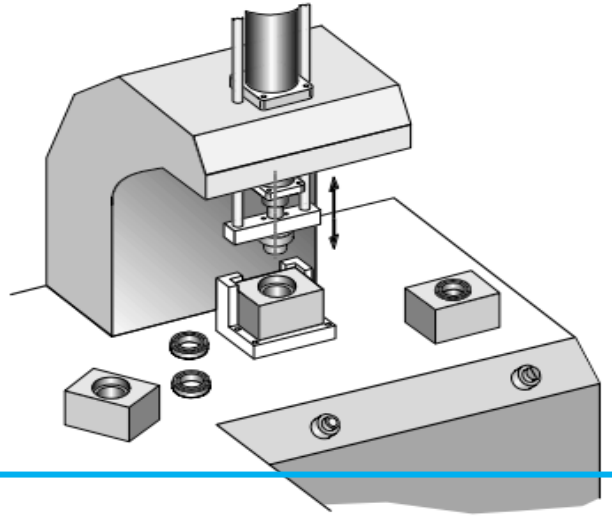

Practical assembly, hydraulic

Item no.	Qty.	Description
0Z1	1	Hydraulic power pack, 2 l/min
0Z2, 1Z	2	Pressure gauge
0V	1	Pressure relief valve
1V1	1	4/2-way solenoid valve
1V2	1	One-way flow control valve
1A	1	Cylinder, 16/10/200
1B	1	Pressure switch
-	2	Branch tee
-	7	Hose line with quick-release coupling, 600 and 1000

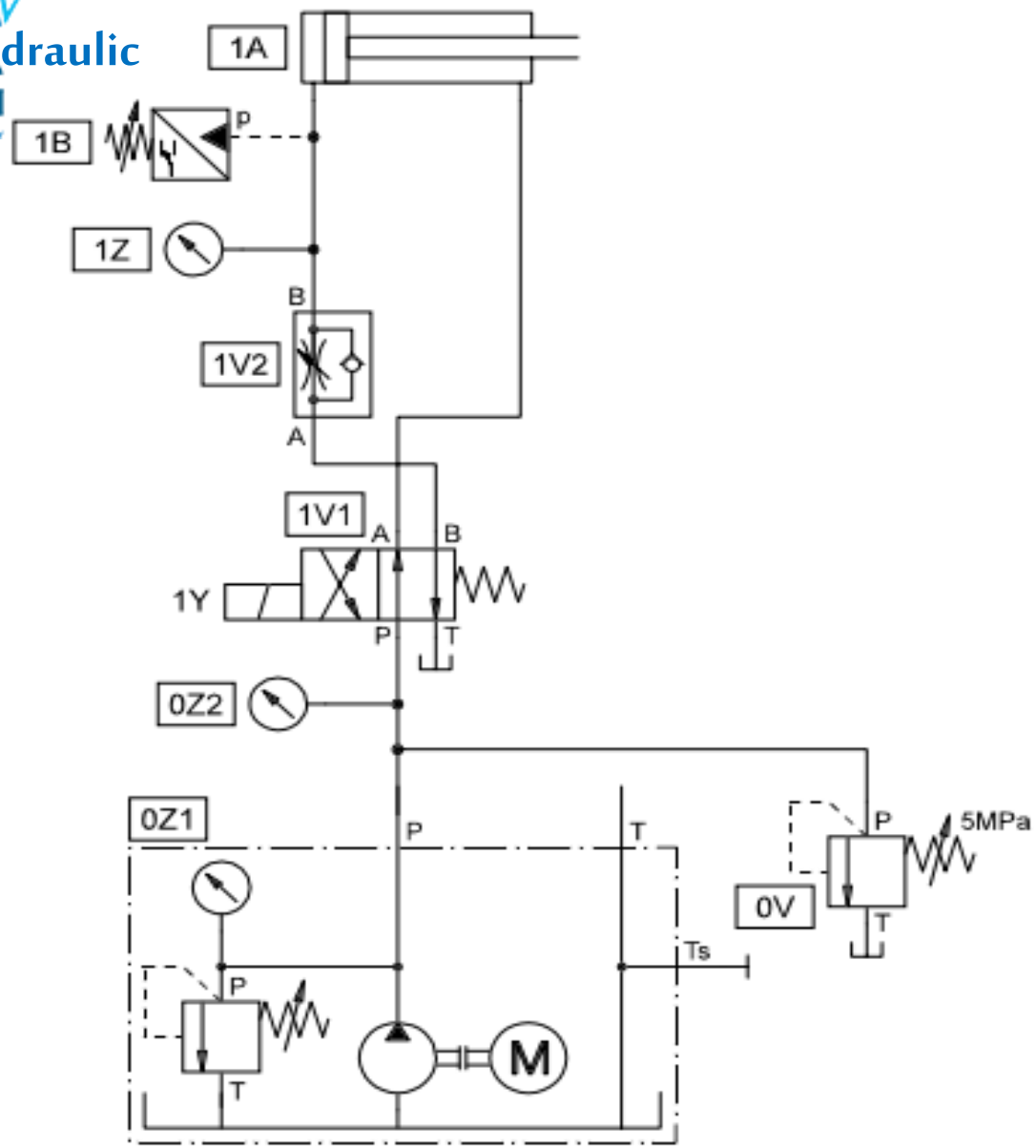

Solution description

When the START pushbutton S1 is pressed, the relay K1 is energized; the 1st normally-open contact of K1 maintains the power supply for the relay K1. Simultaneously, the circuit for the coil 1Y is closed via a further contact of K1. The 4/2-way valve reverses and the piston rod advances until the pressure preset on the pressure switch 1B is reached. The pressure switch acts via K2 to cancel the latching of K1. This also interrupts the circuit for the coil 1Y, causing this to become de-energized. The 4/2-way solenoid is reversed back by spring force and the piston rod returns to its initial position. Fit the pressure sensor upstream of the one-way flow control valve: If the advance-stroke speed is controlled by a throttle valve, the throttle valve represents such a large resistance that, when the circuit is switched on, the pressure upstream of this valve rises to over 30 bar. The result of this is that the pressure switch initiates the return stroke before the correct press-fitting pressure has been reached. The pressure must therefore be measured directly upstream of the cylinder supply port.

Circuit diagram, electrical

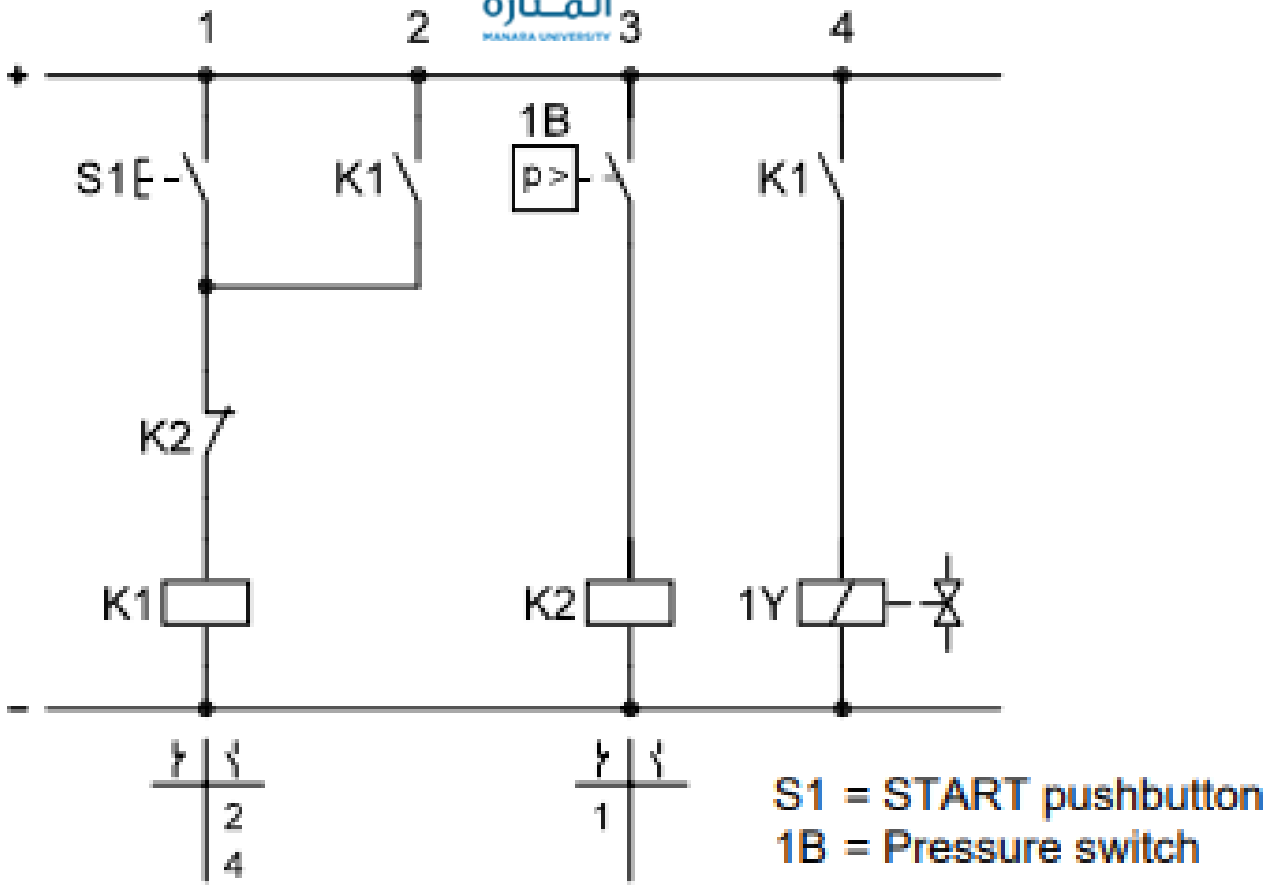

S1 = START pushbutton
1B = Pressure switch

Electrohydraulics Exercise4 : Stamping machine

A hydraulic power pack with a very low pump delivery rate is all that is available to operate a stamping machine. A suitable circuit must be used to increase the advance-stroke speed. The power pack output is sufficient to allow

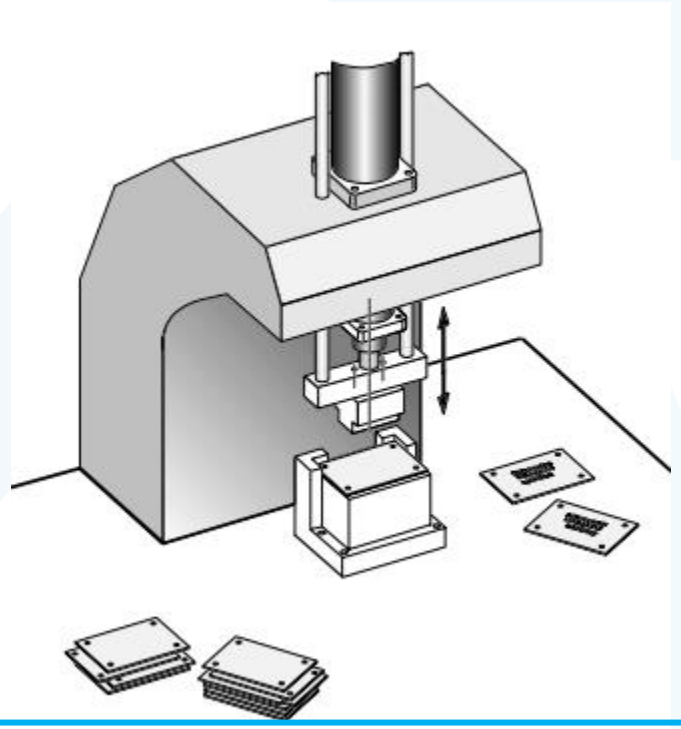

Practical assembly, hydraulic

Item no.	Qty.	Description
0Z1	1	Hydraulic power pack, 2 l/min
0Z2	1	Pressure gauge
0V1	1	Pressure relief valve
0V2	1	2-way flow control valve
1V	1	4/2-way solenoid valve
1A	1	Cylinder, 16/10/200
-	2	Branch tee
-	7	Hose line with quick-release coupling, 600 and 1000

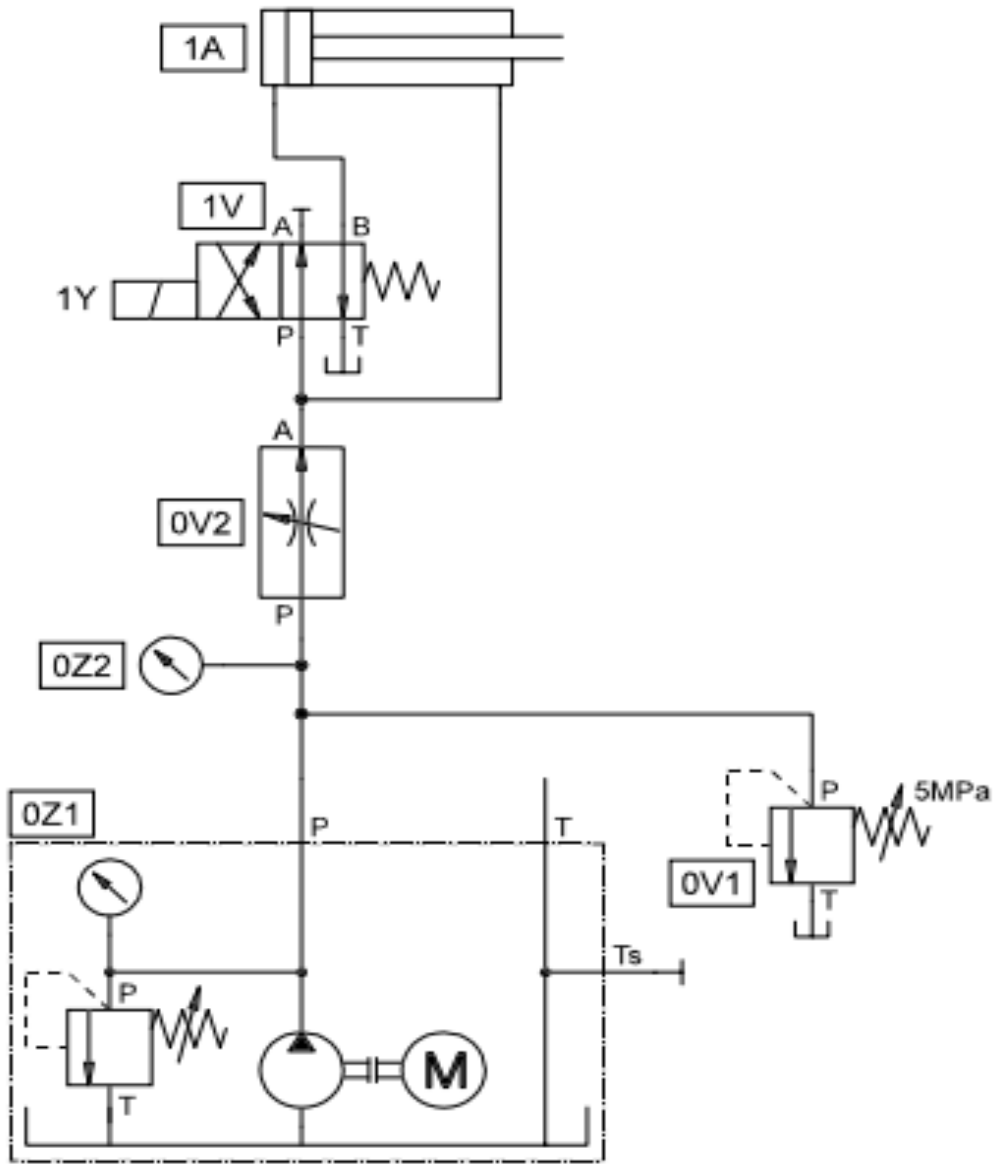

Solution description

A differential circuit is only possible using cylinders with a single-ended piston rod and is intended to increase speed in the forward stroke, whilst pressure is applied to both piston surfaces. Due to the difference in surface areas, a differential force is created, which causes the piston rod to advance. The oil displaced on the piston rod side is fed to the large piston side. The active surface area for the pressing force corresponds to the piston rod surface area. This is why the pressing force is less in the case of increased advancing speed than if pressure is applied to a single-sided piston surface. The solenoid coil 1Y of the 3/2-way valve is actuated via the START button S1. The piston rod advances using the re circulated oil. If the RETURN STROKE button S2 is pressed, 1Y is de-energized, the 3/2- way valve reverses by means of spring force and the piston rod retracts. The flow control valve is used to represent a hydraulic power unit with reduced pump delivery. The effect of the differential circuit is thus more clearly identifiable. The "Practical assembly, hydraulic" drawing shows a 4/2-way solenoid valve instead of the 3/2-way valve.

Circuit diagram, electrical

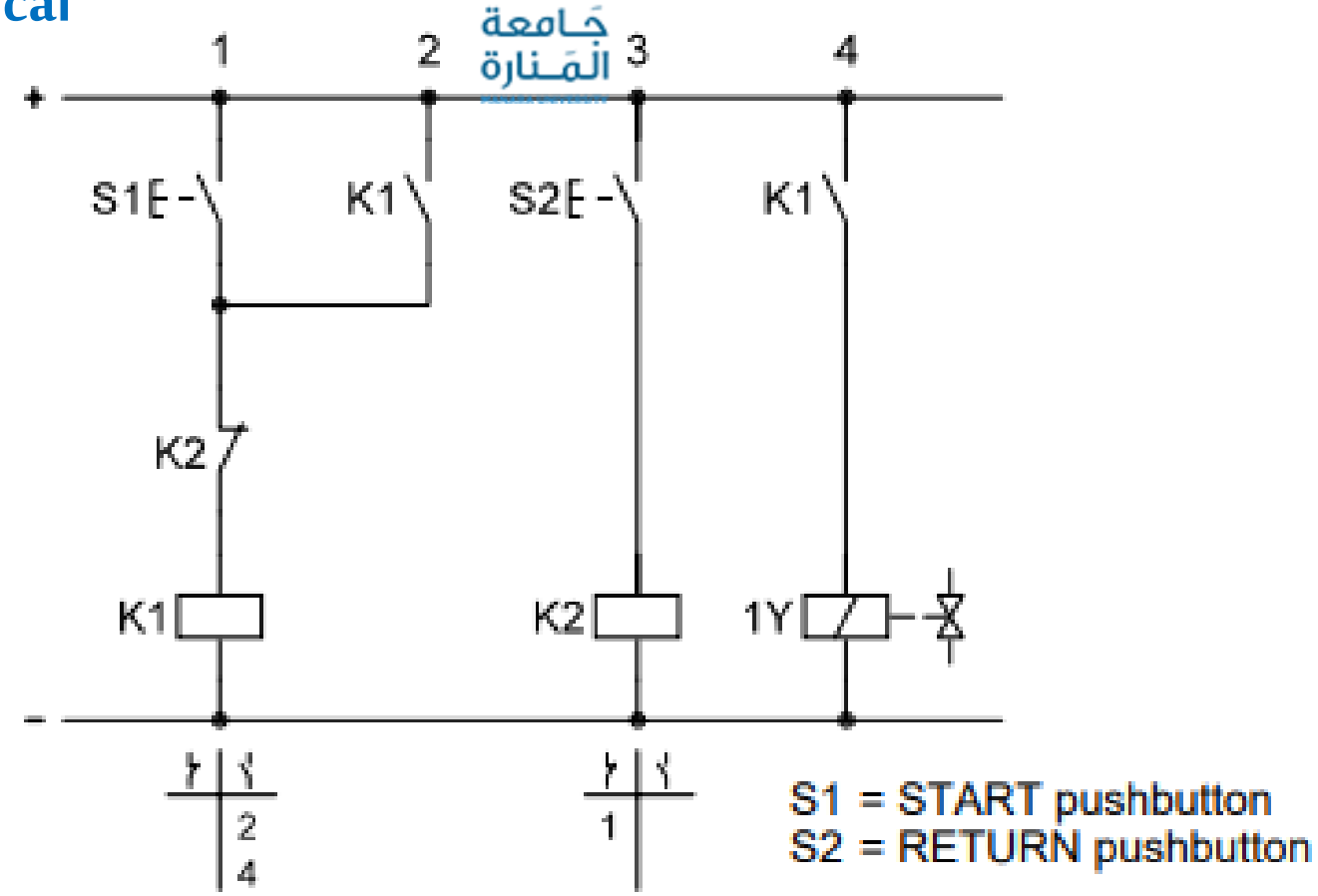

Electrohydraulics Exercise5 :Door control

A double-acting hydraulic cylinder is used to open and close a furnace door. INCHING operation allows the door to be driven to any desired intermediate position. The cylinder is hydraulically clamped in all such positions.

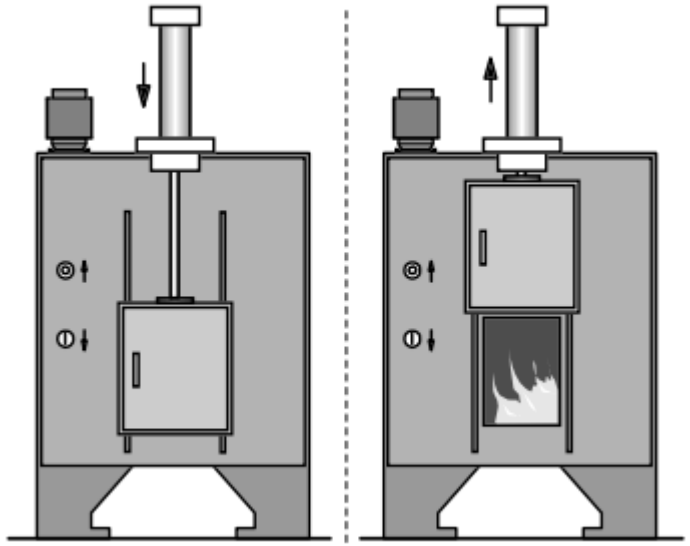

Practical assembly, hydraulic

Item no.	Qty.	Description
0Z1	1	Hydraulic power pack, 2 l/min
0Z2	1	Pressure gauge
0V	1	Pressure relief valve
1V1	1	4/3-way solenoid valve closed in mid-position
1V2	1	4/2-way solenoid valve
1V3	1	Non-return valve, piloted
1V4	1	One-way flow control valve
1A	1	Cylinder, 16/10/200
-	3	Branch tee
-	9	Hose line with quick-release coupling, 600 and 1000

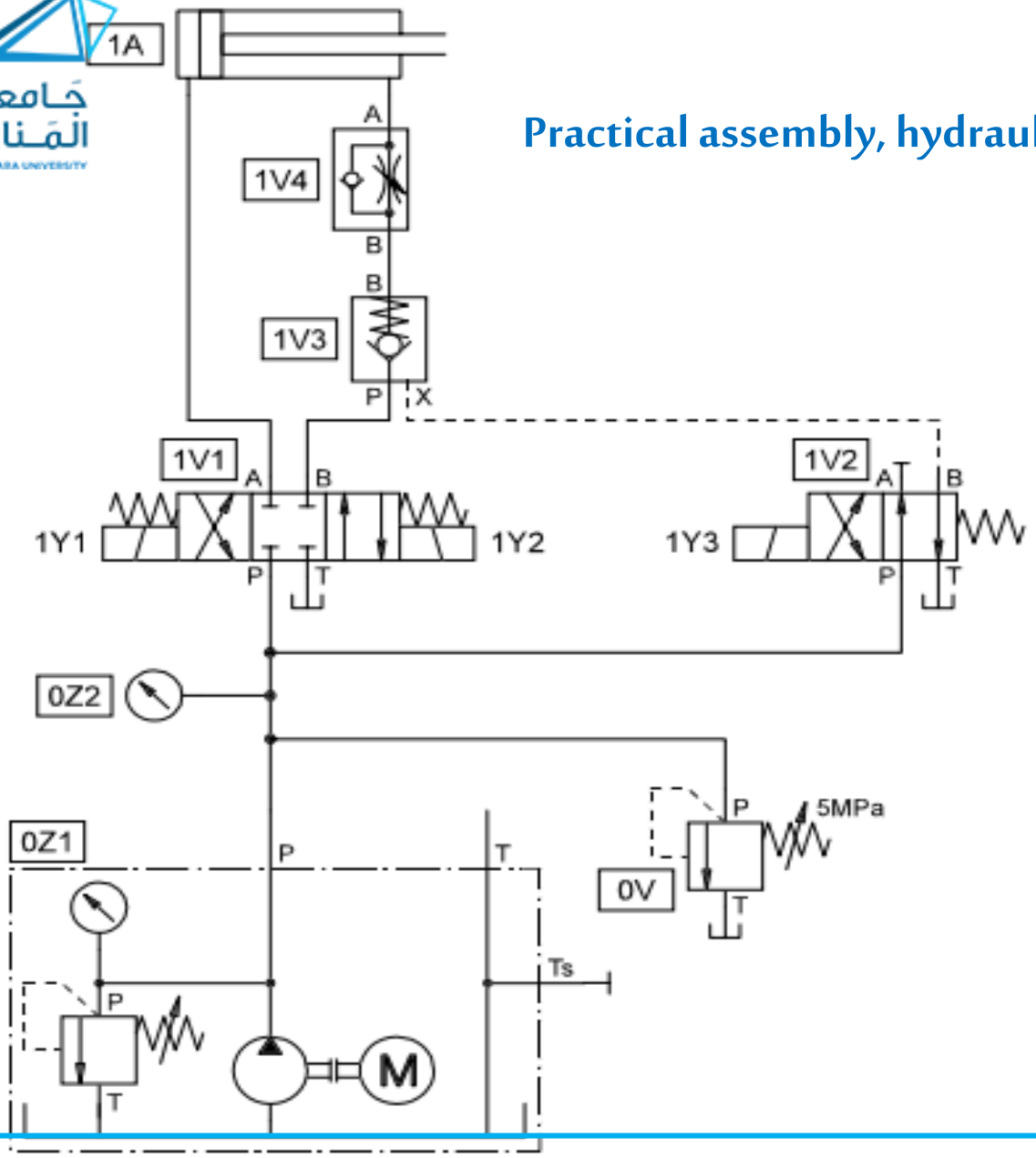

Circuit diagram, electrical

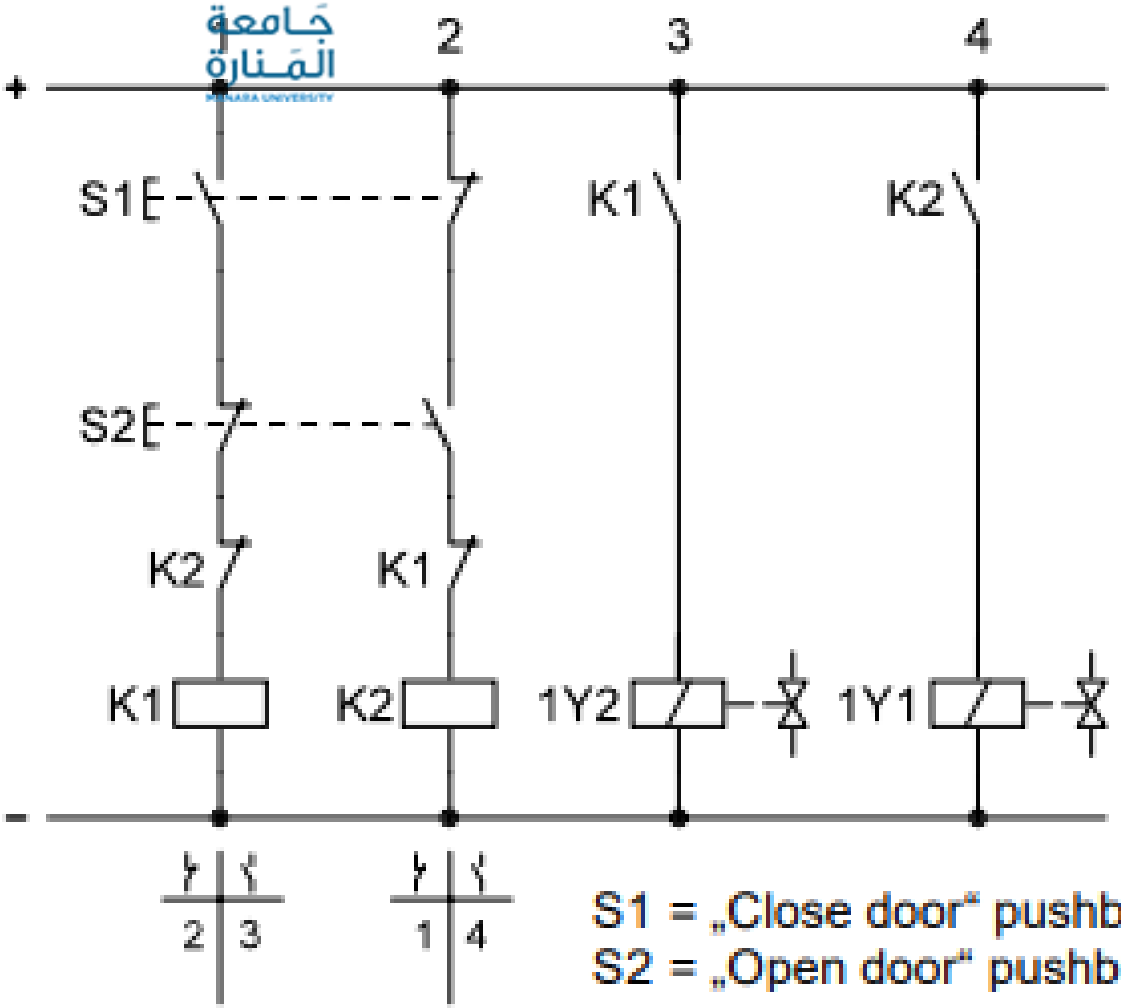

S1 = „Close door“ pushbutton
S2 = „Open door“ pushbutton

Solution description

The hydraulically-piloted non-return valve prevents the piston rod from being pulled out by the tractive load. The piloted non-return valve opens and allows the piston rod to advance only when the “Close door” pushbutton S1 is pressed, causing the 3/2-way valve to reverse. When the pushbutton S1 is released, the 3/2-way valve returns to its initial position and the piloted non-return valve closes immediately. The piston rod is hydraulically clamped and remains where it is. The hydraulic clamping ensures that the piston rod cannot be pulled out by a tractive load. When S1 is pressed again, the piston rod moves forward until the desired end position is reached. When the “Open door” pushbutton S2 is pressed, the piston rod moves back. When S2 is released, the 4/3-way valve reverses, while the piston rod stays where it is and is hydraulically clamped. The two pushbuttons S1 and S2 are mechanically interlocked. If both of these are pressed at the same time or if one is held down and the other pressed, the piston rod stops. The one-way flow control valve is installed on the piston-rod side in order to ensure that a back-pressure develops as the door closes. This pressure is used firstly to provide counter-holding and secondly to enssure reliable opening of the pilot-operated non-return valve.