B. Haidar

Structural Mechanics (1)

Week No-03

Deflection in Determinate Structures

Deflections of Trusses, Beams, & Frames: Work-Energy Methods

- Deflection of trusses by Work & Strain energy principle
- Principle of Virtual Work
- Deflections of Trusses by the V. W. M.
- Deflections of Beams by the V. W. M.
- Deflections of Frames by the V. W. M.

B. Haidar

Deflections of Trusses by the Virtual Work Method

$$W_e = \frac{1}{2}Pv + Pv_v + \frac{1}{2}P_v u_v$$

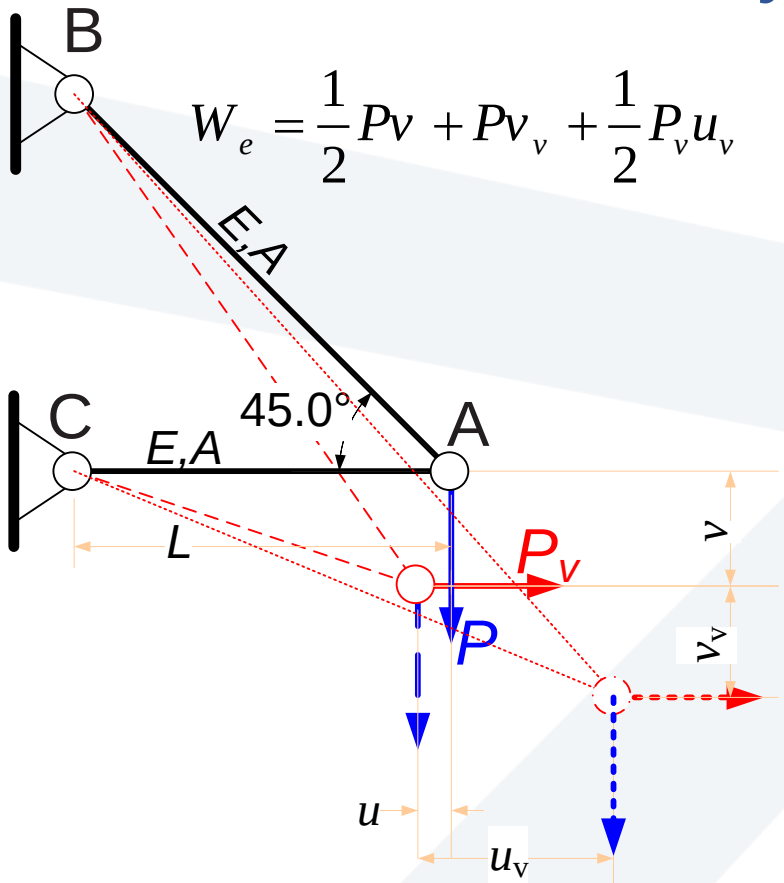

$$W_e = \frac{1}{2}P_v u_v + P_v u + \frac{1}{2}Pv$$

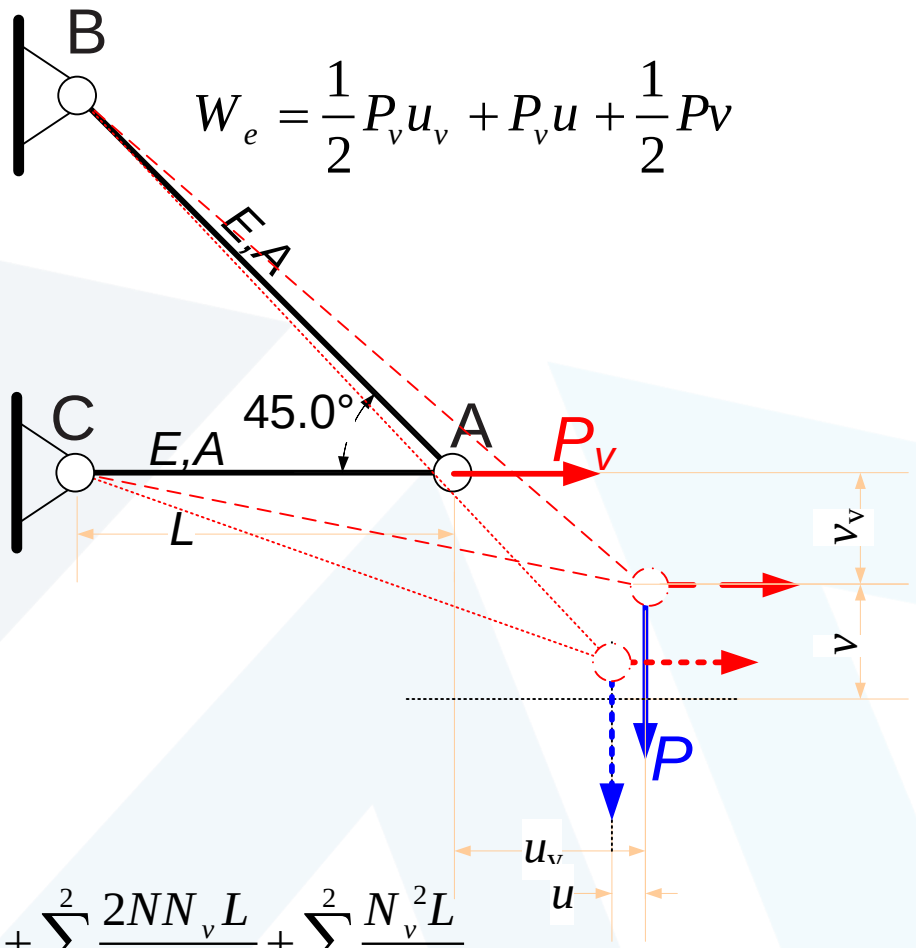

$$U = \sum_{i=1}^{2} \frac{(N + N_v)^2 L}{2EA} = \sum_{i=1}^{2} \frac{N^2 L}{2EA} + \sum_{i=1}^{2} \frac{2NN_v L}{2EA} + \sum_{i=1}^{2} \frac{N_v^2 L}{2EA}$$

$$W_e = U \Rightarrow Pv_v = P_v u = \sum_{i=1}^{2} \frac{NN_v L}{EA}$$

Making P_v=1

$$(1_v)u = u = \sum_{i=1}^{2} \frac{NN_v L}{EA}$$

The truss shown in Fig. carries a gradually applied load P at the joint A. **Compute the horizontal deflection u at A.**

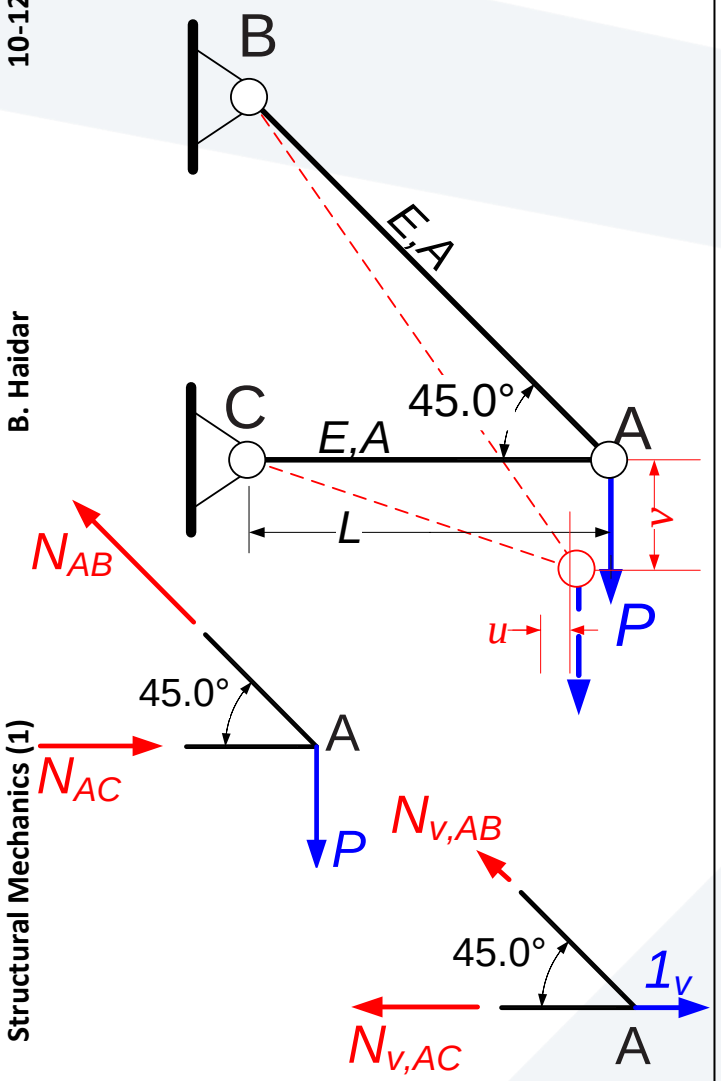

1) Analyzing the truss under the real load, for N in the two members. We found

$N_{AB}=1.41P$ (T) $\qquad$ $N_{AC}=P$ (C)

2) Applying a virtual unit load at A in the direction of u. Then Analyzing For N_v

Considering the vertical equil. at A:

$$N_{v,AB}\cos 45^\circ = 0 \Rightarrow N_{v,AB}=0$$

Considering the horizontal equil. at A:

$$-N_{v,AC} + 1_v = 0 \Rightarrow N_{v,AC} = 1 \text{ (T)}$$

3) Applying the V.W.M

$$(1_v)u = u = \sum_{i=1}^{2} \frac{N N_v L}{EA} = 0 + \frac{(-P)(+1)L}{EA} = \frac{-PL}{EA}$$

Example 01: Use the virtual work method to determine the horizontal components of the deflection at joint C of the truss shown in the following figure.

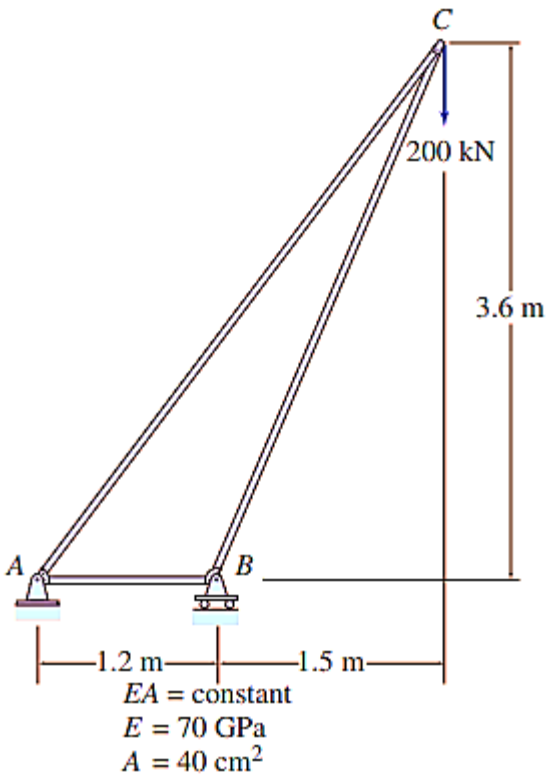

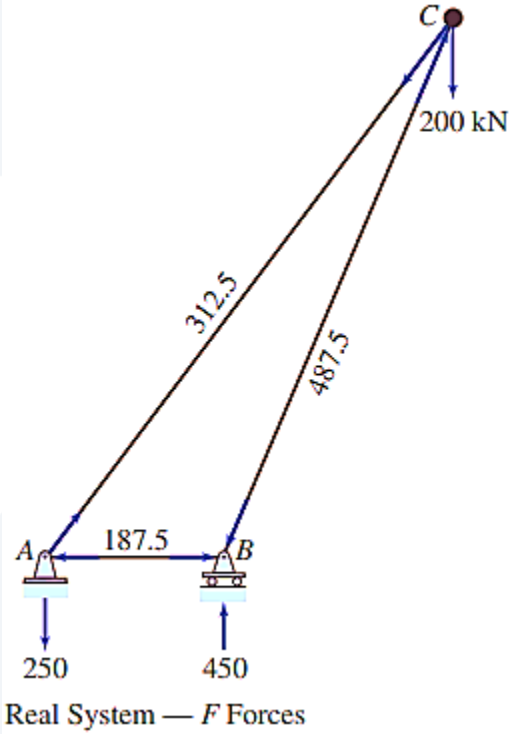

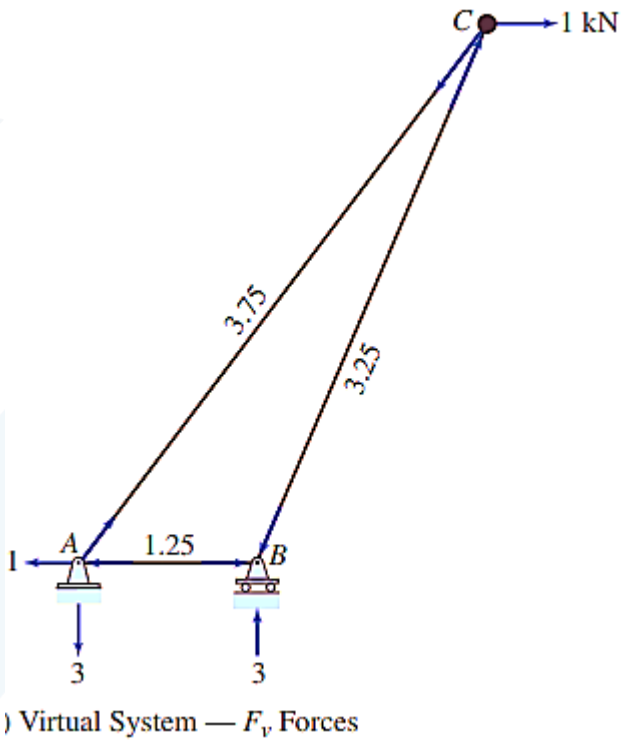

Example 01: The member axial forces due to the real system (N) and this virtual system (N_{v1}) are then tabulated as shown in the following table:.

Member	L (m)	N (kN)	N_v (kN)	$N_v(NL)$ ($kn^2.m$)
AB	1.2	-187.5	-1.25	281.25
AC	4.5	312.5	3.75	5273.44
BC	3.9	-487.5	-3.25	6179.06
				11733.75

Example 01: the virtual work expression is applied to determine Δ_{CH} as shown below:

$$1(\Delta_{CH}) = \frac{1}{E}\sum \frac{N_v(NL)}{A}$$

$$(1\text{kN})(\Delta_{CH}) = \frac{11{,}733.75}{70(10^6)4000(10^{-6})}\text{kN.m}$$

$$\Delta_{CH} = 0.042 \text{ m}$$

$$\Delta_{CH} = 42\ mm \rightarrow$$

Example 02: Use the virtual work method to determine the horizontal components of the deflection at joint G of the truss shown in the following figure.

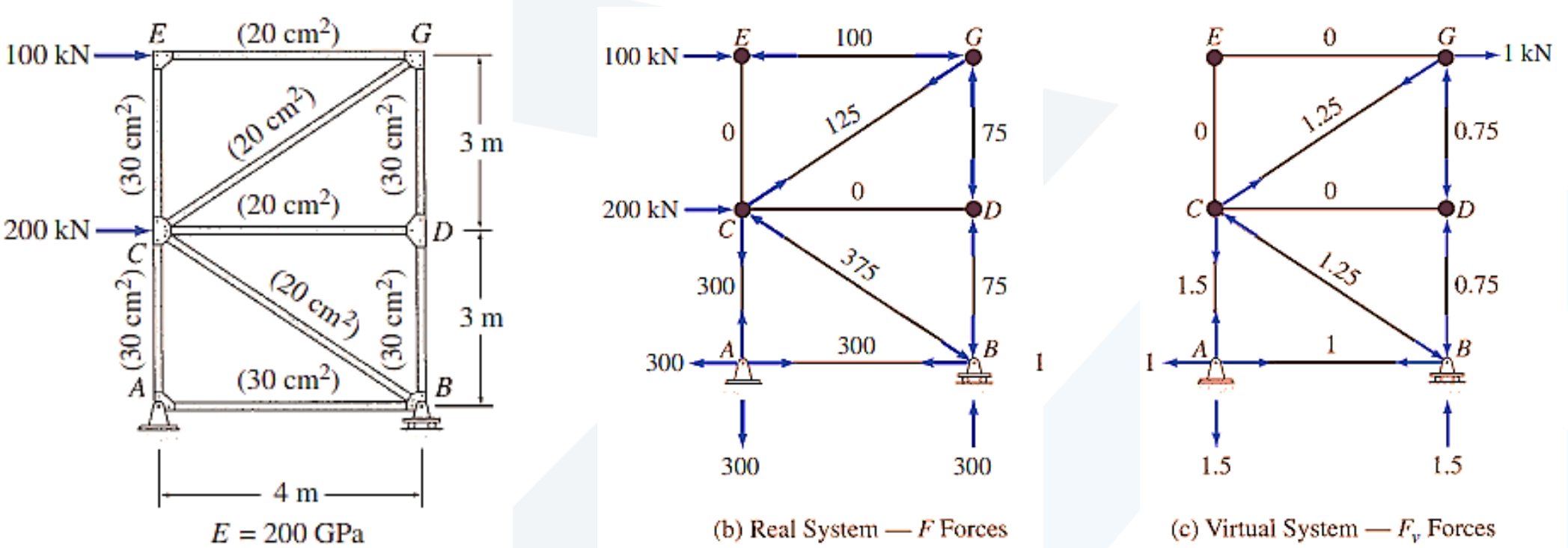

Example 02: The member axial forces due to the real system (N) and this virtual system (N_{v1}) are then tabulated as shown in the following table:

Member	L (m)	A (m^2)	N (kN)	N_v (kN)	N_{v1}(NL/A) (kn^2/m)
AB	4	0.003	300	1	400000
CD	4	0.002	0	0	0
EG	4	0.002	-100	0	0
AC	3	0.003	300	1.5	450000
CE	3	0.003	0	0	0
BD	3	0.003	-75	-0.75	56250
DG	3	0.003	-75	-0.75	56250
BC	5	0.002	-375	-1.25	1171875
CG	5	0.002	125	1.25	390625
					2525000

Example 02: the virtual work expression is applied to determine Δ_{GH} as shown below:

$$1(\Delta_{GH}) = \frac{1}{E}\sum \frac{N_v(NL)}{A}$$

$$(1\ kN)(\Delta_{CH}) = \frac{2525000}{200(10^6)} kN.m$$

$$\Delta_{GH} = 0.0126\ \text{m}$$

$$\Delta_{GH} = 12.6\ mm\ \rightarrow$$

Example 03: Use the virtual work method to determine the horizontal and vertical components of the deflection at joint B of the truss shown in the following figure. **Then find the vertical deflection at D without V.U.L.**

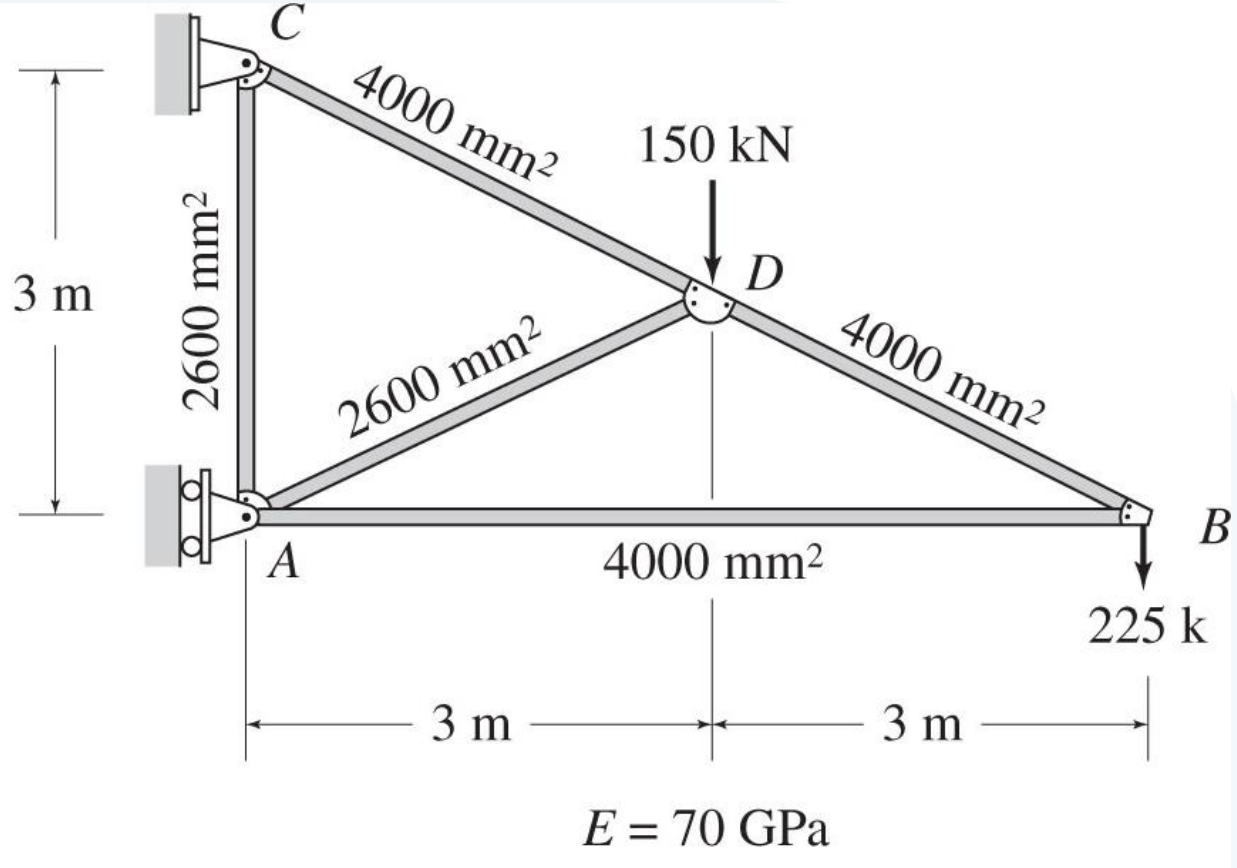

Example 03: Use the virtual work method to determine the horizontal and vertical components of the deflection at joint B of the truss shown in the following figure. **Then find the vertical deflection at D without V.U.L.**

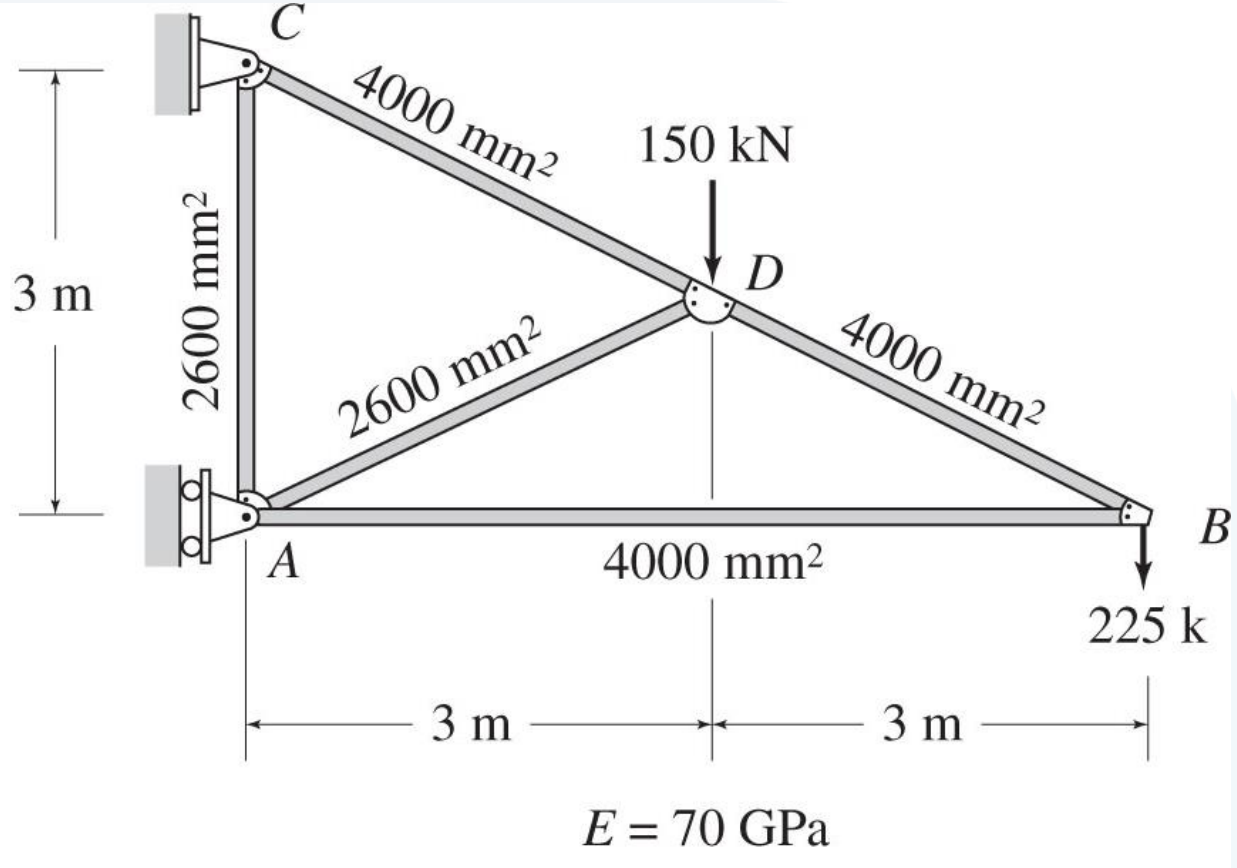

Example 03: Horizontal Deflection at B, Δ_{BH}

Real System The real system and the corresponding member axial forces (N) are shown in the following figure.

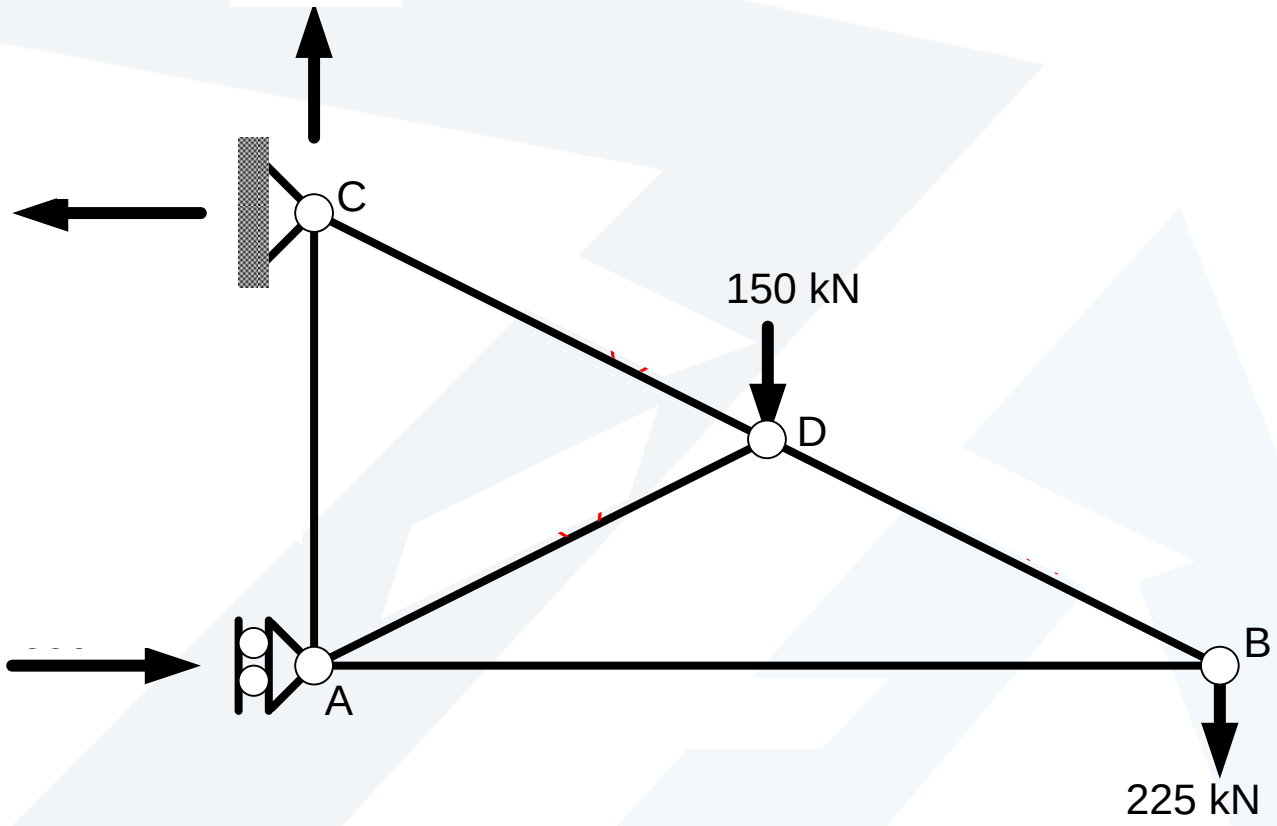

Example 03: Virtual System Horizontal Deflection at B, Δ_{BH} : The virtual system used for determining the horizontal deflection at B consists of a 1-kN load applied in the horizontal direction at joint B, as shown in the following fig. The member axial forces (N_{v1}) due to this virtual load are also shown in this figure.

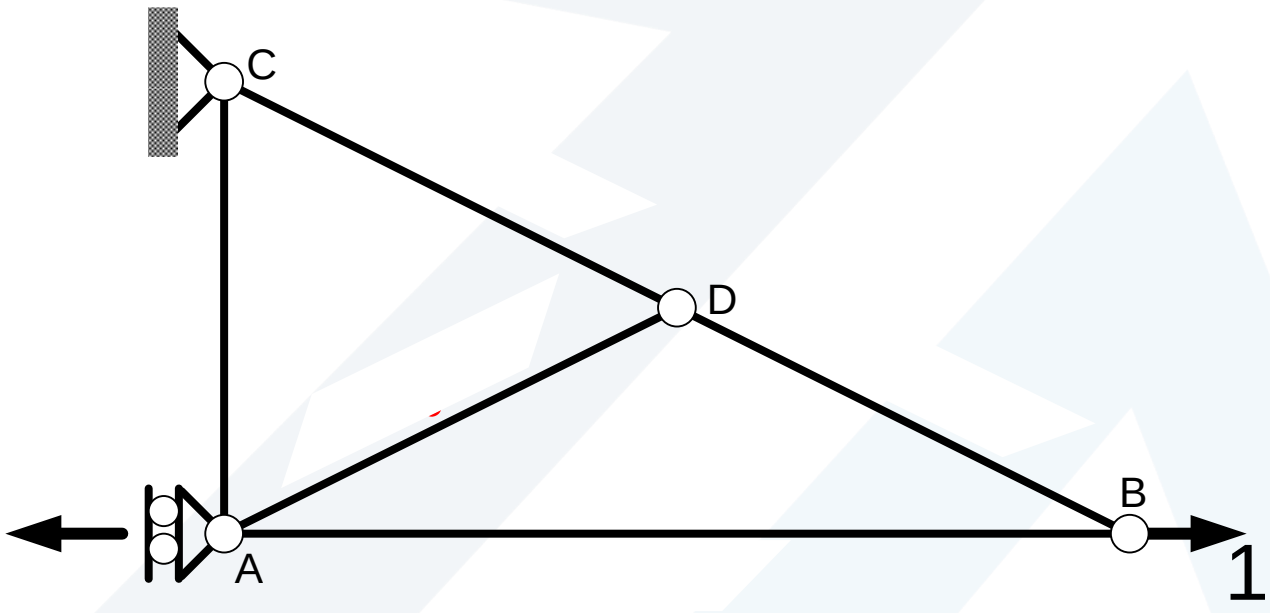

Example 03: The member axial forces due to the real system (N) and this virtual system (N_{v1}) are then tabulated as shown in the following table:

Member	L (m)	A (m^2)	N (kN)	N_{v1} (kN)	$N_{v1}(NL/A)$ (kn^2/m)
AB	6	0.0040	-450	1	-675.000
AC	3	0.0026	75	0	0
AD	3.354	0.0026	-167.7	0	0
CD	3.354	0.0040	670.8	0	0
BD	3.354	0.0040	503.1	0	0
					-675.000

Example 03: the virtual work expression is applied to determine Δ_{BH} as shown below:

$$1(\Delta_{BH}) = \frac{1}{E}\sum \frac{N_{v1}(NL)}{A}$$

$$(1)(\Delta_{BH}) = -\frac{675,000}{70(10^6)}\frac{\text{kN.m}}{\text{kN-m}} = -0.00964\,\text{m}$$

$$\Delta_{BH} = 9.64\,\text{mm} \leftarrow$$

Example 03: Virtual System Vertical Deflection at B, Δ_{BV} : The virtual system used for determining the vertical deflection at B consists of a 1-kN load applied in the vertical direction at joint B, as shown in the following fig. The member axial forces (N_{v2}) due to this virtual load are also shown in this figure.

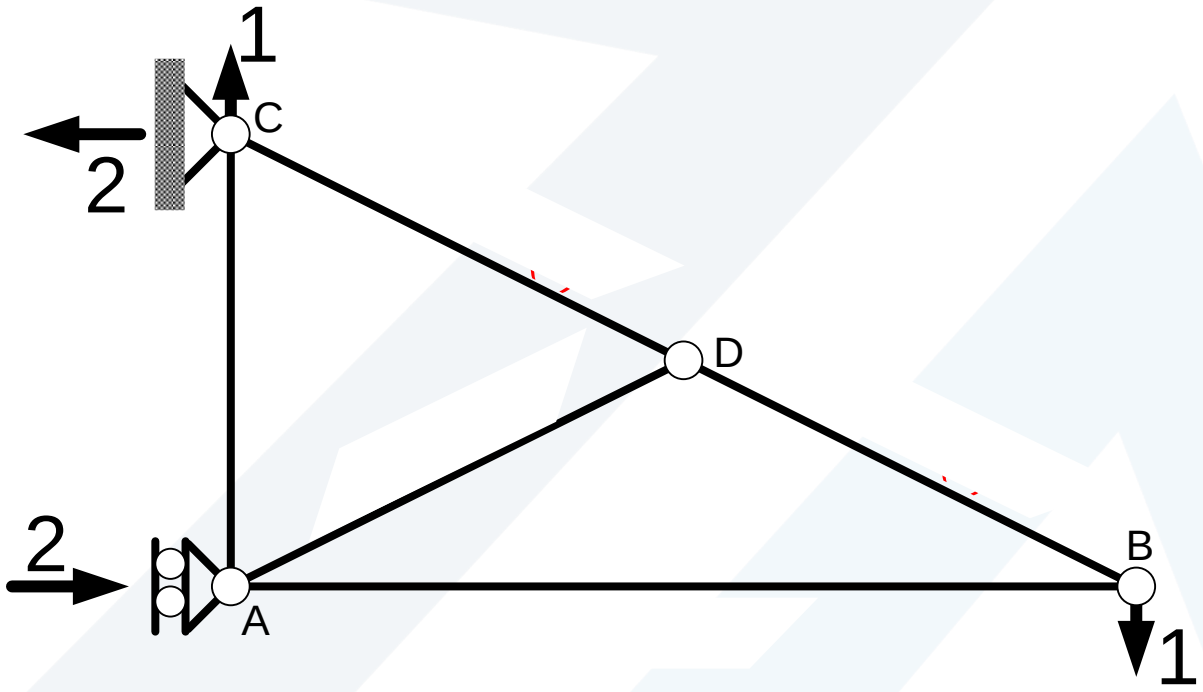

Example 03: The member axial forces due to the real system (N) and this virtual system (N_{v2}) are then tabulated as shown in the following table:

Member	L (m)	A (m^2)	N (kN)	N_{v2} (kN)	$N_{v2}(NL/A)$ (kn^2/m)
AB	6	0.0040	-450	-2	1,350,000
AC	3	0.0026	75	0	0
AD	3.354	0.0026	-167.7	0	0
CD	3.354	0.0040	670.8	2.236	1,257,674
BD	3.354	0.0040	503.1	2.236	943,255
				$\sum$	**3,550,929**

Example 03: the virtual work expression is applied to determine Δ_{BV} as shown below:

$$1(\Delta_{BV}) = \frac{1}{E}\sum \frac{N_{v2}(NL)}{A}$$

$$(1)(\Delta_{BV}) = \frac{3,550,929}{70(10^6)}\frac{\text{kN.m}}{\text{kN-m}} = 0.05073\text{m}$$

$$\Delta_{BV} = 50.73\text{mm}\downarrow$$

Example 04:

Members of the truss shown consist of sections of aluminum pipe with the cross-sectional areas indicated.

Using $E = 73$ GPa, determine the vertical deflection of the point E caused by the load P.

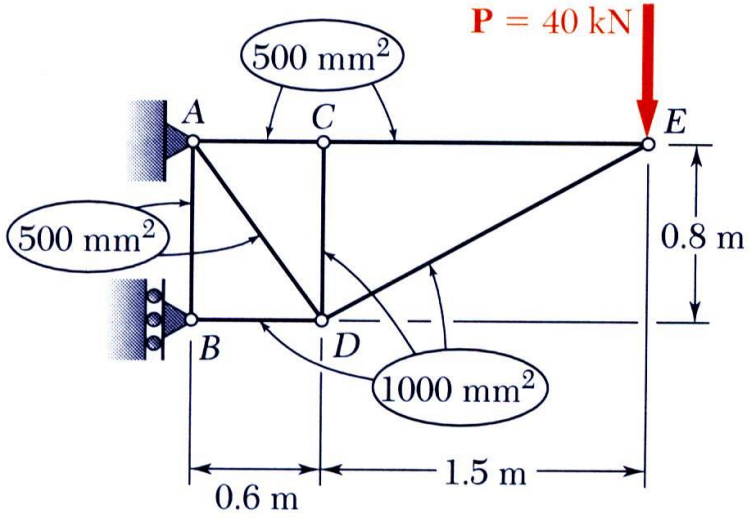

Solution

Members of the truss shown consist of sections of aluminum pipe with the cross-sectional areas indicated.

Using E = 73 GPa, determine the vertical deflection of the point E caused by the load P.

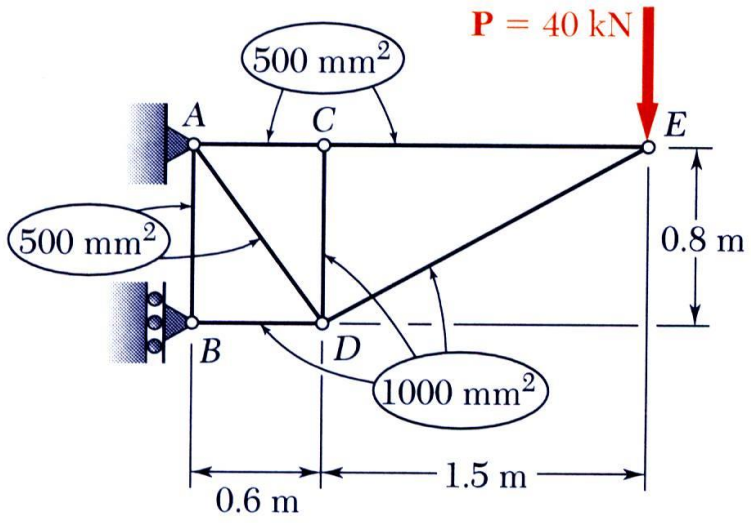

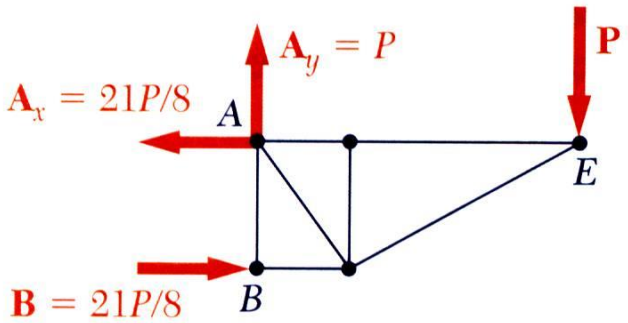

- Find the reactions at A and B from a free-body diagram of the entire truss.

$$A_x = -21P/8 \qquad A_y = P \qquad B_x = 21P/8$$

- Apply the method of joints to determine the axial force in each member.

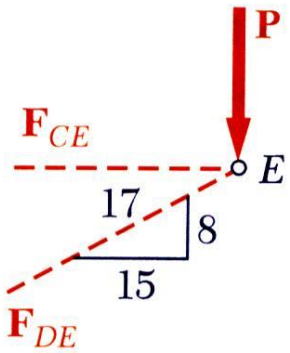

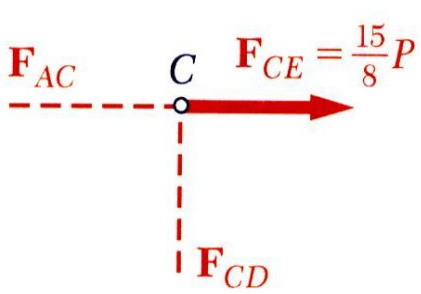

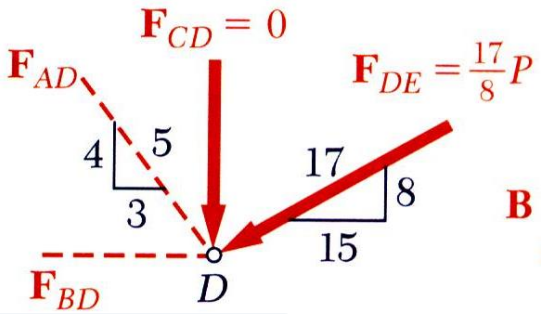

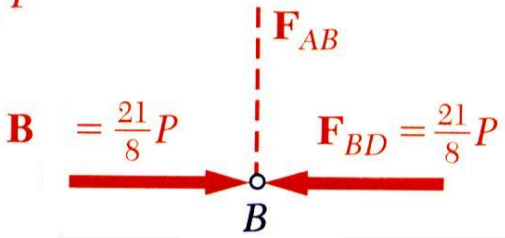

$F_{DE} = -\frac{17}{8}P$

$F_{CE} = +\frac{15}{8}P$

$F_{AC} = +\frac{15}{8}P$

$F_{CD} = 0$

$F_{DA} = \frac{5}{4}P$

$F_{DB} = -\frac{21}{8}P$

$F_{AB} = 0$

$$(½)P\, v_E = \sum (N^2{}_i L_i / 2E_i A_i) \Rightarrow v_E \cong 16.27 \text{ mm} \downarrow$$

Example 05:

Determine the smallest cross-sectional area (A) required for the members of the truss shown, so that the vertical deflection at joint (B) does not exceed 10 mm. Use the virtual work method.

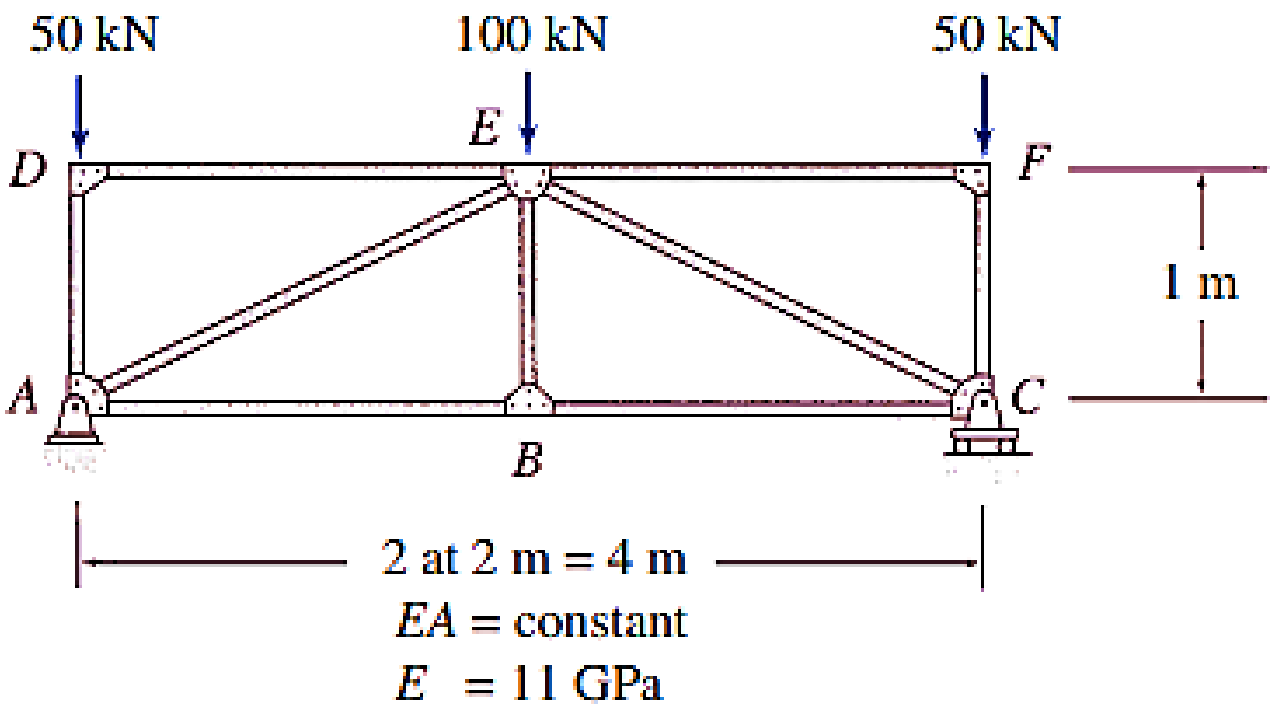

Example 05:

Determine the smallest cross-sectional area (A) required for the members of the truss shown, so that the vertical deflection at joint (B) does not exceed 10 mm. Use the virtual work method.

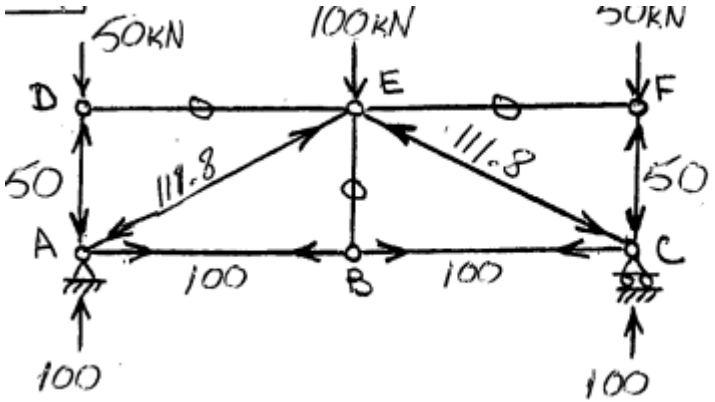

F Forces

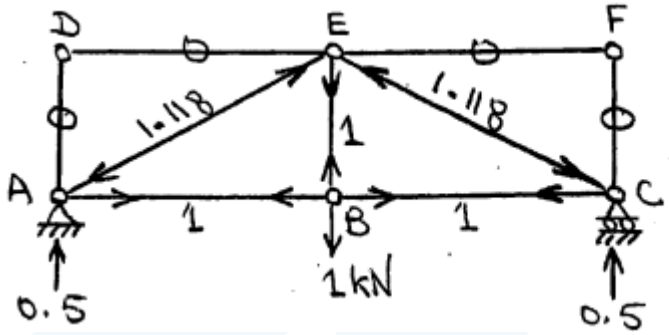

F_v Forces

$$A = 0.0008\,m^2 = 800\,mm^2$$

Homework

Problem.02: Use the virtual work method to determine the horizontal deflection at joint (E) of the truss shown.

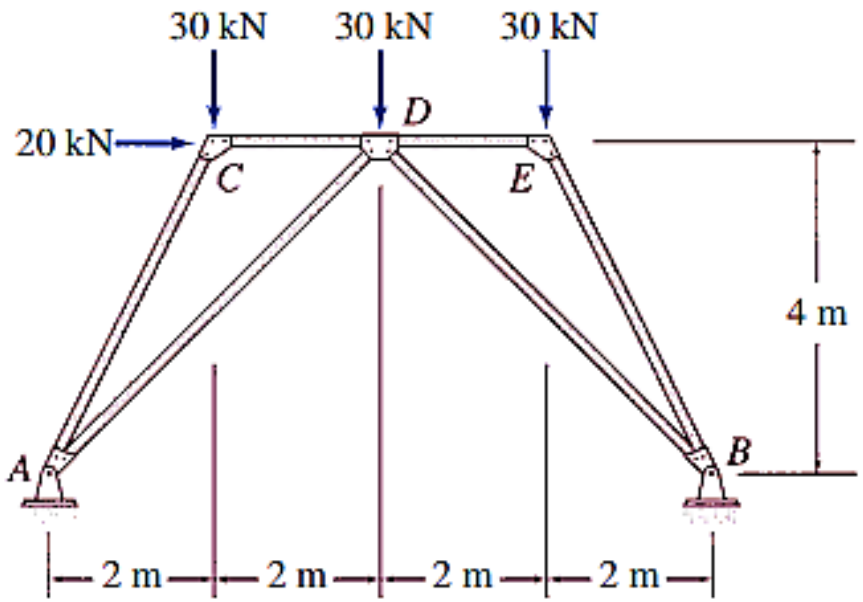

EA = constant
E = 200 GPa
A = 5000 mm^2