إشارات ونظم

جلسة عملي ثالثة + رابعة

إعداد: م. همام ياسين

إشراف: د. رامز قدسية

13. For the signal $x[n]$ shown, sketch the following signals:

a. $g[n] = x[n-3]$

b. $g[n] = x[-n]$

c. $g[n] = x[2-n]$

d. $g[n] = x[n]\delta[n-3]$

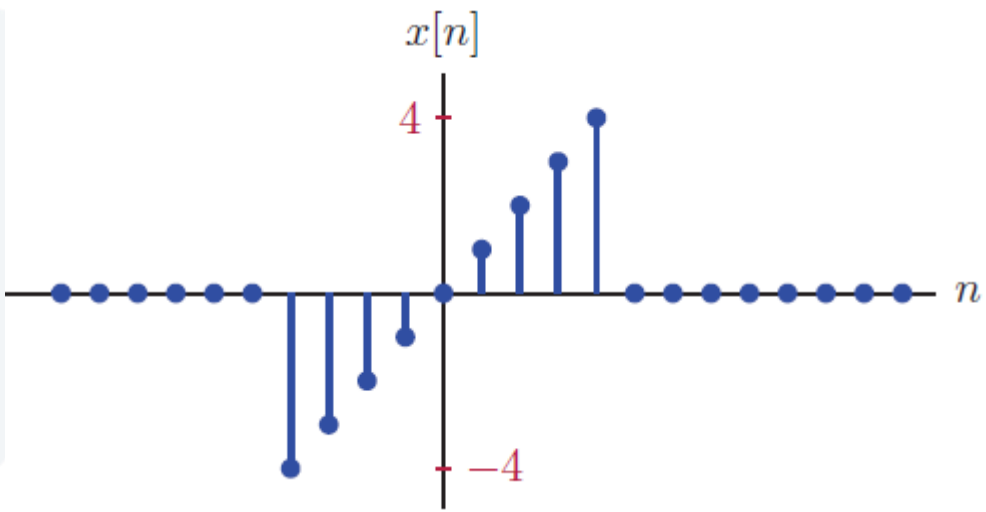

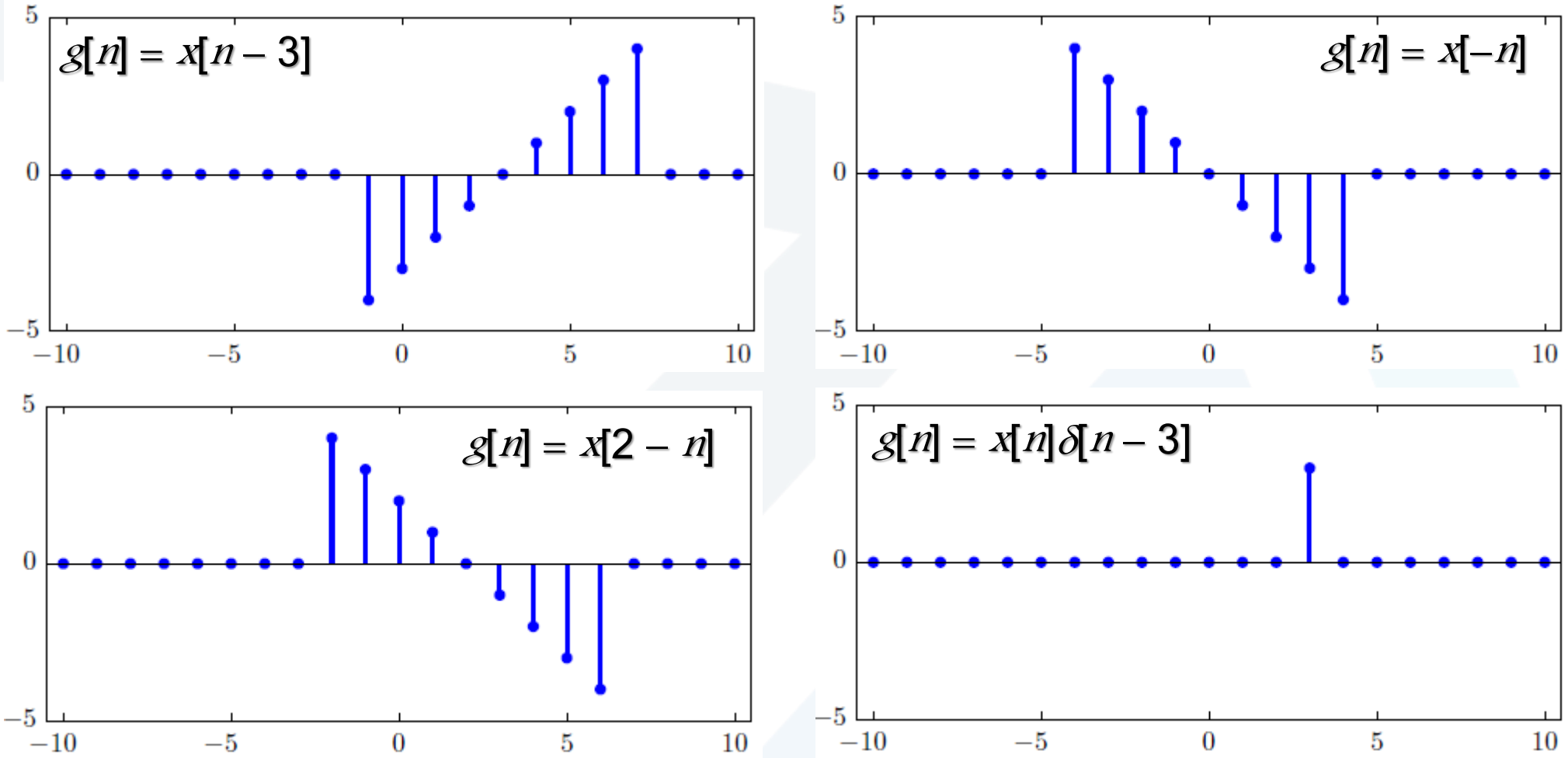
$g[n] = x[n-3]$
$g[n] = x[-n]$
$g[n] = x[2-n]$
$g[n] = x[n]\delta[n-3]$
5
0
−5
−10
−5
0
5
10

14. Consider the sinusoidal discrete-time signal:

$$x[n] = 5\cos\left(\frac{3\pi}{23}n + \frac{\pi}{4}\right)$$

Is the signal periodic? If yes, determine the fundamental period

$2\pi F_0 = 3\pi/23 \Rightarrow F_0 = 3/46$

$N = k/F_0 = 46k/3$

For $k = 3$ we get $N = 46$.

15. sketch each signal described below:

a. $x[n] = (0.8)^n\, u[n]$

b. $x[n] = u[n] - u[n-10]$

c. $x[n] = r[n] - 2r[n-5] + r[n-10]$

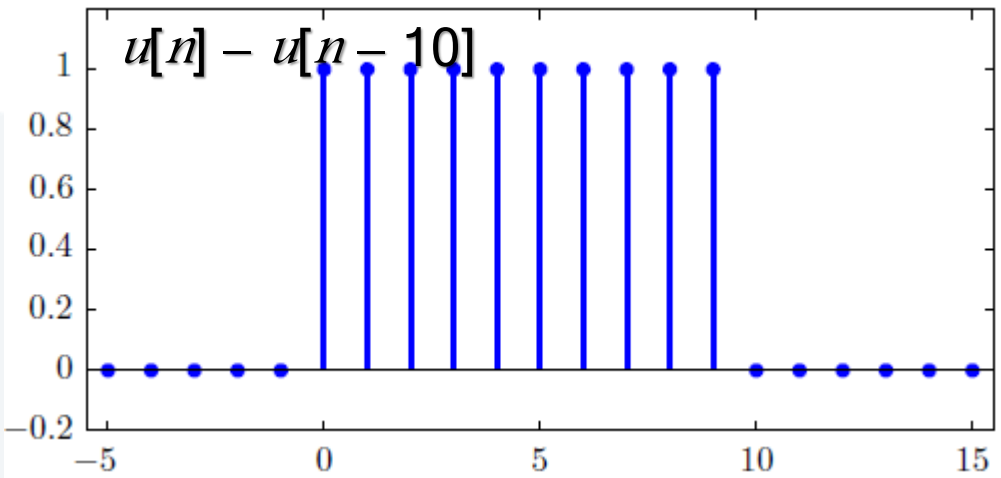

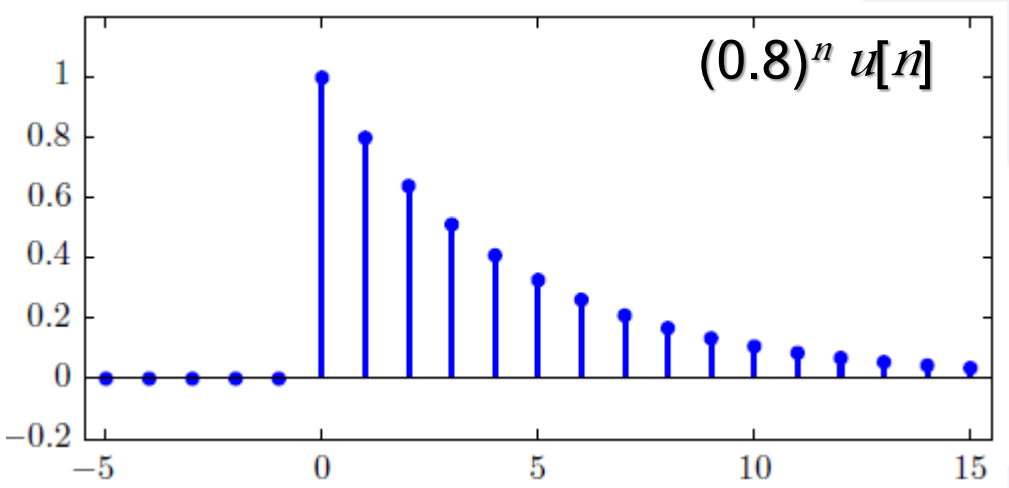

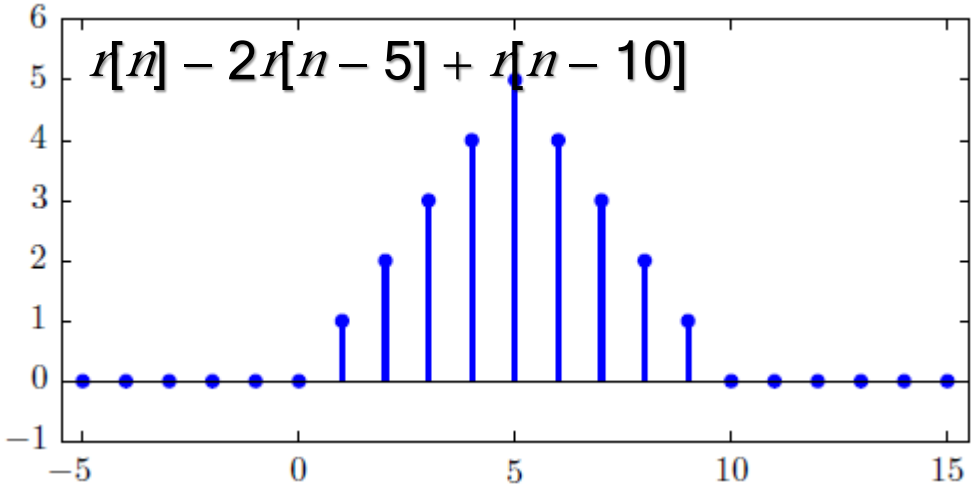

16. Determine the normalized energy of each signal described in Ex.15

$$a.\ E_x = \sum_{n=0}^{\infty} (0.8)^{2n} = \sum_{n=0}^{\infty} (0.64)^n = \frac{1}{1-0.64} \approx 2.771$$

$$b.\ E_x = \sum_{n=0}^{9} (1)^2 = 10$$

$$c.\ E_x = \sum_{n=0}^{5} n^2 + \sum_{n=6}^{10} (10-n)^2 \qquad m = 10 - n$$

$$= \sum_{n=0}^{5} n^2 + \sum_{m=4}^{0} m^2 = 5^2 + 2\sum_{n=0}^{4} n^2 = 85$$

1. For each case, determine if the system is linear and/or time-invariant:

a. $y(t) = |x(t)| + x(t)$ — The system is not linear, is time-invariant

b. $y(t) = tx(t)$ — The system is linear, is not time-invariant

c. $y(t) = e^{-t}x(t)$ — The system is linear, is not time-invariant

d. $y(t) = \int_{-\infty}^{t} x(\tau)d\tau$ — The system is linear, is time-invariant

e. $y(t) = \int_{t-1}^{t} x(\tau)d\tau$ — The system is linear, is time-invariant

f. $y(t) = (t+1)\int_{-\infty}^{t} x(\tau)d\tau$ — The system is linear, is not time-invariant

2. Differential equation for RLC circuit:

Find a DE between the input $x(t)$ and the output $y(t)$. At $t = 0$ the initial values are $i_L(0) = 1$ A, $v_C(0) = 2$ V. Express the initial conditions for $y(t)$ and $dy(t)/dt$.

$$x(t) = Ri_L(t) + Ri_C(t) + y(t)$$

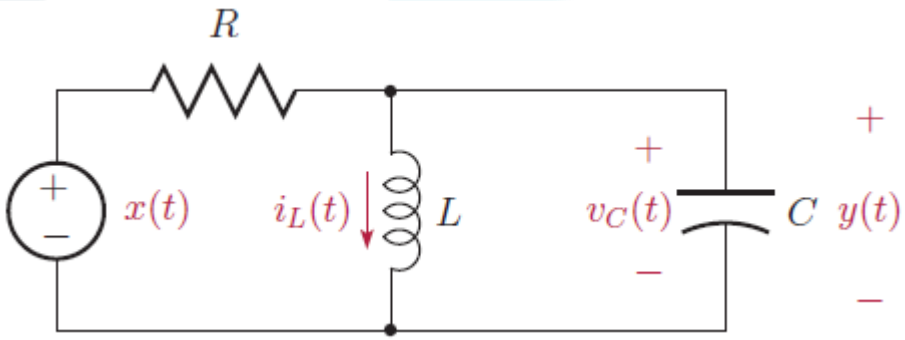

$$i_C(t) = C\frac{dv_C(t)}{dt} = C\frac{dy(t)}{dt},\ y(t) = v_L(t) = L\frac{di_L(t)}{dt}$$

$$x(t) = Ri_L(t) + RC\frac{dy(t)}{dt} + y(t)$$

$$\frac{dx(t)}{dt} = R\frac{di_L(t)}{dt} + RC\frac{d^2y(t)}{dt^2} + \frac{dy(t)}{dt} = \frac{R}{L}y(t) + RC\frac{d^2y(t)}{dt^2} + \frac{dy(t)}{dt}$$

$$\frac{d^2y(t)}{dt^2} + \frac{1}{RC}\frac{dy(t)}{dt} + \frac{1}{LC}y(t) = \frac{1}{RC}\frac{dx(t)}{dt}$$

$$y(0) = v_C(0) = 2$$

$$x(0) = Ri_L(0) + RC\left.\frac{dy(t)}{dt}\right|_{t=0} + y(0) \Rightarrow \left.\frac{dy(t)}{dt}\right|_{t=0} = -\frac{2}{RC} - \frac{1}{C} + \frac{1}{RC}x(0)$$

3. Consider the differential equation for the RC circuit :

$$\frac{dy(t)}{dt} + 4y(t) = 4x(t)$$

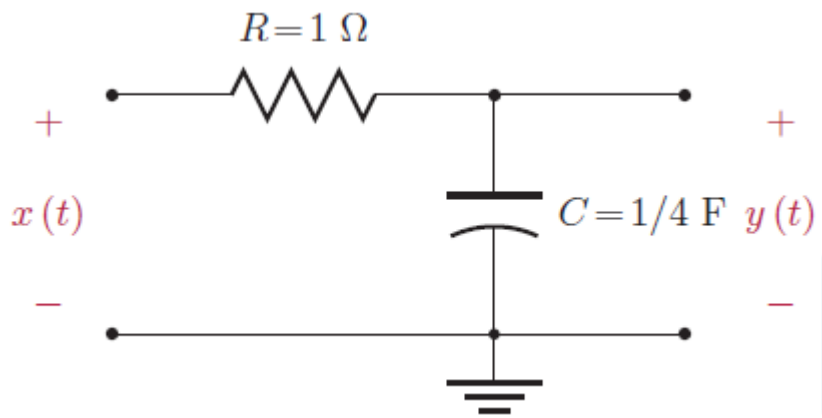

Let the input signal be a unit step, that is, $x(t) = u(t)$. Using the first-order differential equation solution technique find the solution $y(t)$ for $t \geq 0$ subject to each initial condition specified below:

a. $y(0) = 0$

b. $y(0) = 5$

$$y(t) = e^{-4t}y(0) + \int_0^t e^{-4(t-\tau)}u(t)d\tau = e^{-4t}y(0) + 4e^{-4t}\int_0^t e^{-4\tau}d\tau$$

$$= e^{-4t}y(0) + 1 - e^{-4t}, \quad t \geq 0$$

a. $y(t) = 1 - e^{-4t}, \quad t \geq 0$

b. $y(t) = 1 + 4e^{-4t}, \quad t \geq 0$

4. Solve each of the first-order differential equations given below for the specified input signal and subject to the specified initial condition:

a. $\frac{dy(t)}{dt} + 2y(t) = 2x(t), \quad x(t) = u(t) - u(t-5), \quad y(0) = 2$

b. $\frac{dy(t)}{dt} + 5y(t) = 3x(t), \quad x(t) = \delta(t), \quad y(0) = 0.5$

c. $\frac{dy(t)}{dt} + 5y(t) = 3x(t), \quad x(t) = tu(t), \quad y(0) = -4$

d. $\frac{dy(t)}{dt} + y(t) = 2x(t), \quad x(t) = e^{-2t}u(t), \quad y(0) = -1$

$$a.\ y(t) = 2e^{-2t} + e^{-2t}\int_0^t 2e^{2\tau}\left[u(t) - u(t-5)\right]d\tau$$

$$y(t) = 2e^{-2t} + 2e^{-2t}\int_0^t e^{2\tau}d\tau = 1 + e^{-2t}, \quad 0 < t < 5$$

$$y(t) = 2e^{-2t} + 2e^{-2t}\int_0^5 e^{2\tau}d\tau = e^{-2t}(1 + e^{10}), \quad t > 5$$

$$b.\ y(t) = 0.5e^{-5t} + e^{-5t}\int_0^t 3e^{5\tau}\delta(t)d\tau = 3.5e^{-5t}, \quad t > 0$$

$$c.\ y(t) = -4e^{-5t} + e^{-5t}\int_0^t e^{5\tau}3\tau u(\tau)d\tau = \frac{3}{5}t - \frac{3}{25} - \frac{97}{25}e^{-5t}, \quad t \geq 0$$

$$d.\ y(t) = -e^{-t} + e^{-t}\int_0^t e^{\tau}2e^{-2\tau}u(\tau)d\tau = e^{-t} - 2e^{-2t}, \quad t \geq 0$$

5. For each homogeneous DE given below, find the homogeneous solution for $t \geq 0$ in each case subject to the initial conditions specified condition:

a. $$\frac{d^2y(t)}{dt^2} + 3\frac{dy(t)}{dt} + 2y(t) = 0, \quad y(0) = 3, \quad \left.\frac{dy(t)}{dt}\right|_{t=0} = 0$$

b. $$\frac{d^3y(t)}{dt^3} + 6\frac{d^2y(t)}{dt^2} + 11\frac{dy(t)}{dt} + 6y(t) = 0, \quad y(0) = 2, \left.\frac{dy(t)}{dt}\right|_{t=0} = -1, \left.\frac{d^2y(t)}{dt^2}\right|_{t=0} = 1$$

c. $$\frac{d^2y(t)}{dt^2} + 3\frac{dy(t)}{dt} = 0, \quad y(0) = 2, \quad \left.\frac{dy(t)}{dt}\right|_{t=0} = 0$$

d. $$\frac{d^2y(t)}{dt^2} + 2\frac{dy(t)}{dt} + 2y(t) = 0, \quad y(0) = -2, \quad \left.\frac{dy(t)}{dt}\right|_{t=0} = -1$$

$$a.\ s^2 + 3s + 2 = (s+1)(s+2) = 0 \Rightarrow s_1 = -1,\ s_2 = -2$$

$$y(t) = c_1 e^{-t} + c_2 e^{-2t}, \quad t \geq 0$$

$$y(0) = c_1 + c_2 = 3, \quad \left.\frac{dy(t)}{dt}\right|_{t=0} = -c_1 - 2c_2 = 0 \Rightarrow c_1 = 6 \text{ and } c_2 = -3$$

$$y(t) = 6e^{-t} - 3e^{-2t}, \quad t \geq 0$$

$$b.\ s^3 + 6s^2 + 6s + 2 = (s+1)(s+2)(s+3) = 0 \Rightarrow s_1 = -1,\ s_2 = -2,\ s_3 = -3$$

$$y(t) = c_1 e^{-t} + c_2 e^{-2t} + c_2 e^{-3t}, \quad t \geq 0$$

$$y(0) = c_1 + c_2 + c_3 = 2, \left.\frac{dy(t)}{dt}\right|_{t=0} = -c_1 - 2c_2 - 3c_3 = -1, \left.\frac{d^2y(t)}{dt^2}\right|_{t=0} = c_1 + 4c_2 + 9c_3 = 1$$

$$\Rightarrow c_1 = 4,\ c_2 = -3 \text{ and } c_3 = 1$$

$$y(t) = 46e^{-t} - 3e^{-2t} + e^{-3t}, \quad t \geq 0$$

$$c.\ s^2 + 3 = (s + j\sqrt{3})(s - j\sqrt{3}) = 0 \Rightarrow s_1 = j\sqrt{3},\ s_2 = -j\sqrt{3}$$

$$y(t) = d_1\cos(\sqrt{3}t) + d_2\sin(\sqrt{3}t), \quad t \geq 0$$

$$\Rightarrow d_1 = 2 \text{ and } d_2 = 0$$

$$y(t) = 2\cos(\sqrt{3}t), \quad t \geq 0$$

$$d.\ s^2 + 2s + 2 = (s + 1 + j)(s + 1 - j) = 0 \Rightarrow s_1 = -1 + j,\ s_2 = -1 - j$$

$$y(t) = d_1e^{-t}\cos(t) + d_2e^{-t}\sin(t), \quad t \geq 0$$

$$\Rightarrow d_1 = -2 \text{ and } d_2 = -3$$

$$y(t) = -2e^{-t}\cos(t) - 3e^{-t}\sin(t), \quad t \geq 0$$

6. Consider the differential equation for the RC circuit :

$$\frac{dy(t)}{dt} + 4y(t) = 4x(t)$$

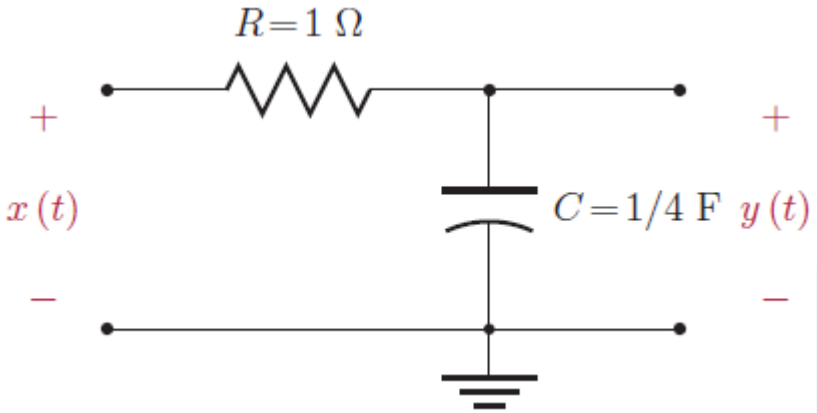

Assuming the circuit is initially relaxed, compute and sketch the response to a sinusoidal input signal in the form $x(t) = 5\cos(8t)$

$$y_h(t) = ce^{-4t},\ t \geq 0$$

$$y_p(t) = a\cos(8t) + b\sin(8t) \Rightarrow \frac{dy_p(t)}{dt} = -8a\sin(8t) + 8b\cos(8t)$$

$$-8a\sin(8t) + 8b\cos(8t) + 4a\cos(8t) + 4b\sin(8t) = 20\cos(8t) \Rightarrow a = 1,\ b = 2$$

$$y(t) = ce^{-4t} + \cos(8t) + 2\sin(8t),\ t \geq 0$$

$$y(0) = 0 \Rightarrow c = -1 \Rightarrow y(t) = -e^{-4t} + \cos(8t) + 2\sin(8t),\ t \geq 0$$

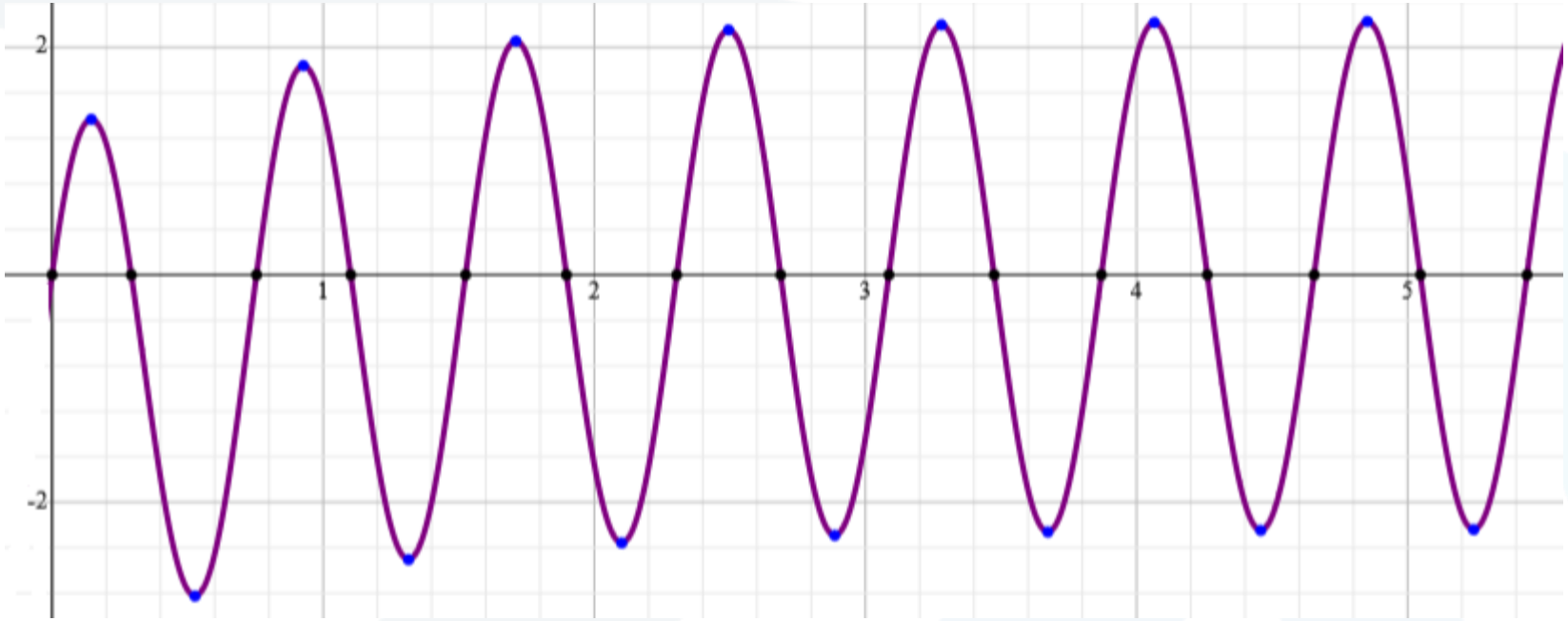

7. A system is described by the differential equation:

$$\frac{d^2y(t)}{dt^2} + 4\frac{dy(t)}{dt} + 3y(t) = \frac{dx(t)}{dt} - 2x(t), \quad y(0) = -2, \quad \left.\frac{dy(t)}{dt}\right|_{t=0} = 1$$

Draw a block diagram

$$\frac{d^2w(t)}{dt^2} + 4\frac{dw(t)}{dt} + 3w(t) = x(t)$$

$$y(t) = \frac{dw(t)}{dt} - 2w(t)$$

$$y(0) = \left.\frac{dw(t)}{dt}\right|_{t=0} - 2w(0) = -2, \quad \left.\frac{dy(t)}{dt}\right|_{t=0} = \left.\frac{d^2w(t)}{dt^2}\right|_{t=0} - 2\left.\frac{dw(t)}{dt}\right|_{t=0} = 1$$

$$\left.\frac{d^2w(t)}{dt^2}\right|_{t=0} = -4\left.\frac{dw(t)}{dt}\right|_{t=0} - 3w(0) + x(0) \Rightarrow -6\left.\frac{dw(t)}{dt}\right|_{t=0} - 3w(0) = 1 \ \left(\text{assuming } x(0) = 0\right)$$

$$\Rightarrow \left.\frac{dw(t)}{dt}\right|_{t=0} = -\frac{8}{15}, \quad \left.\frac{d^2w(t)}{dt^2}\right|_{t=0} = \frac{11}{15}$$

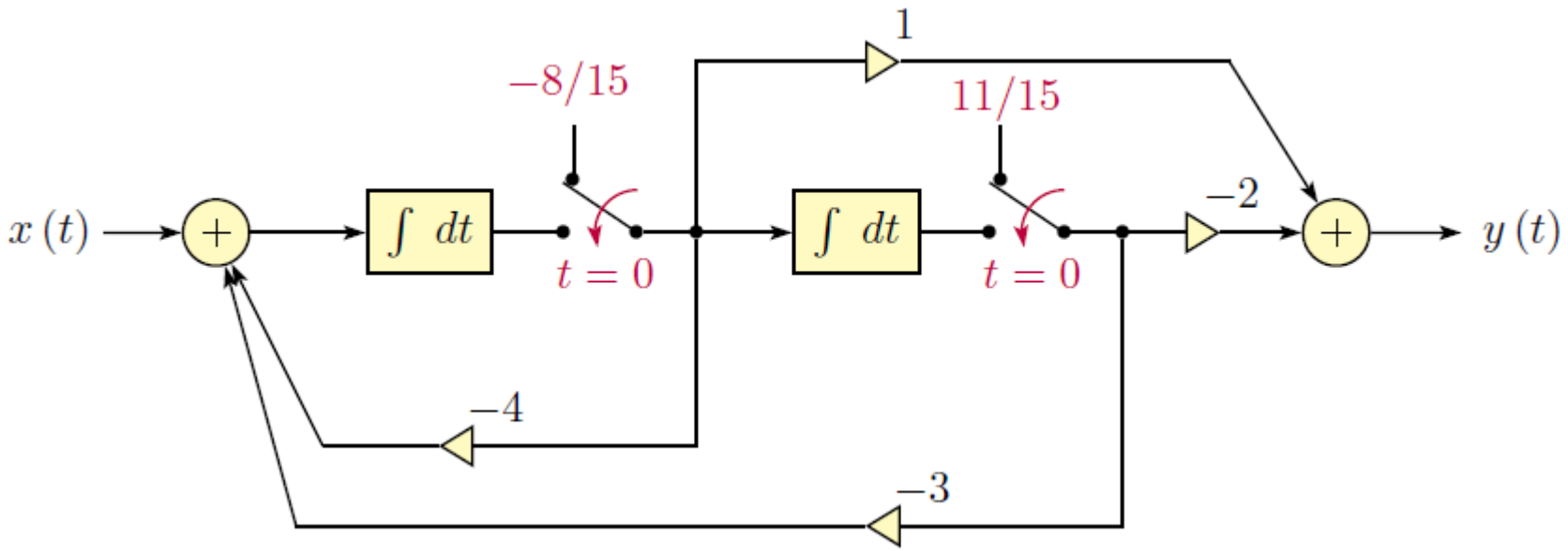

8. Two CTLTI systems with impulse responses $h_1(t)$ and $h_2(t)$ are connected in cascade:

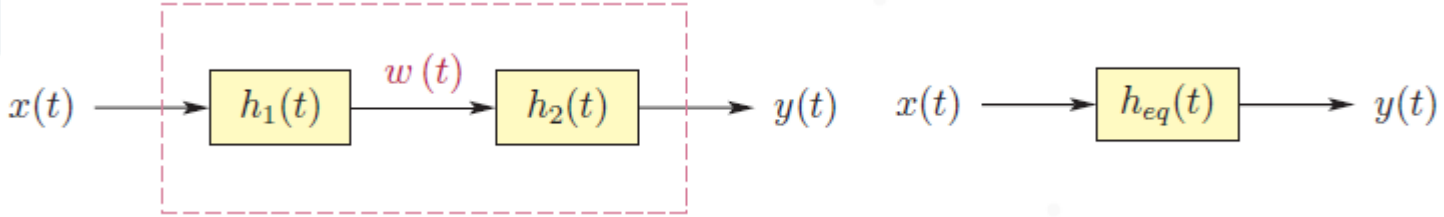

a. Determine the impulse response $h_{eq}(t)$ of the equivalent system, in terms of $h_1(t)$ and $h_2(t)$.

Hint: Use convolution to express $w(t)$ in terms of $x(t)$. Afterwards use convolution again to express $y(t)$ in terms of $w(t)$.

b. Let $h_1(t) = h_2(t) = \Pi(t - 0.5)$ where $\Pi(t)$ is the unit pulse. Determine and sketch $h_{eq}(t)$ for the equivalent system.

c. With $h_1(t)$ and $h_2(t)$ as specified in part (b), let the input signal be a unit step, that is, $x(t) = u(t)$. Determine and sketch the signals $w(t)$ and $y(t)$.

$$a.\ w(t) = h_1(t) * x(t)$$

$$y(t) = h_2(t) * w(t) = h_2(t) * [h_1(t) * x(t)] = [h_2(t) * h_1(t)] * x(t)$$

$$\Rightarrow h_{eq}(t) = h_2(t) * h_1(t) = h_1(t) * h_2(t)$$

$$b.\ h_{eq}(t) = \int_{-\infty}^{\infty} \Pi(\tau - 0.5)\Pi(t - \tau - 0.5)d\tau$$

$$\Pi(\tau - 0.5) = \begin{cases} 1, & 0 < \tau < 1 \\ 0, & \text{otherwise} \end{cases} \qquad \Pi(t - \tau - 0.5) = \begin{cases} 1, & t - 1 < \tau < t \\ 0, & \text{otherwise} \end{cases}$$

$$t < 0: \qquad h_{eq}(t) = 0$$

$$0 < t < 1: \qquad h_{eq}(t) = \int_0^t d\tau = t$$

$$1 < t < 2: \qquad h_{eq}(t) = \int_{t-1}^{1} d\tau = 2 - t$$

$$t > 2: \qquad h_{eq}(t) = 0$$

$$h_{eq}(t) = \begin{cases} t, & 0 < t < 1 \\ 2 - t, & 1 < t < 2 \\ 0 & \text{otherwise} \end{cases}$$

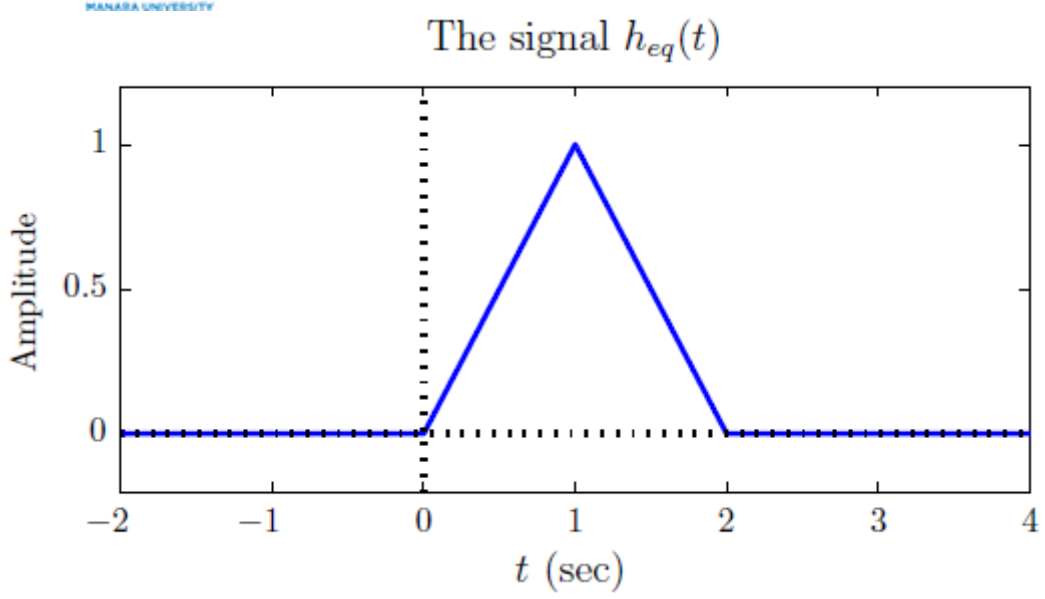

$$c.\ w(t) = \int_{-\infty}^{\infty} h_1(\tau) u(t-\tau) d\tau$$

$$u(t-\tau) = \begin{cases} 1, & \tau < t \\ 0, & \tau > t \end{cases} \quad \Rightarrow \quad w(t) = \int_{-\infty}^{t} h_1(\tau) d\tau$$

$$t < 0: \qquad w(t) = 0$$

$$0 < t < 1: \quad w(t) = \int_0^t d\tau = t$$

$$t > 1: \qquad w(t) = \int_0^1 d\tau = 1$$

$$w(t) = \begin{cases} 0, & t < 0 \\ t, & 0 < t < 1 \\ 1 & t > 1 \end{cases}$$

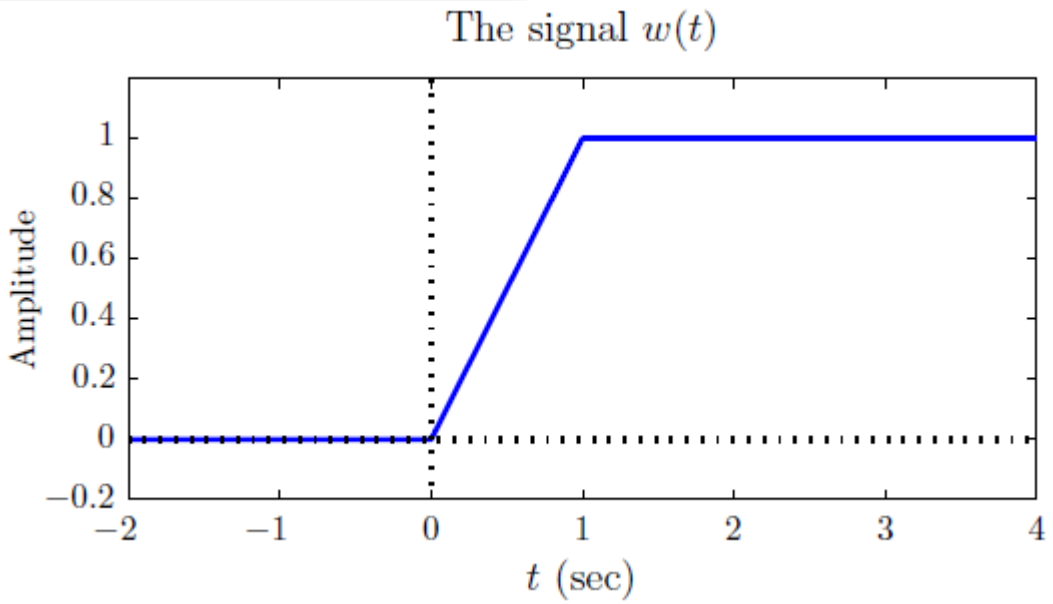

$$y(t) = \int_{-\infty}^{\infty} h_{eq}(\tau)u(t-\tau)d\tau = \int_{-\infty}^{t} h_{eq}(\tau)d\tau$$

$$t < 0: \qquad y(t) = 0$$

$$0 < t < 1: \qquad y(t) = \int_0^t \tau d\tau = \frac{t^2}{2}$$

$$1 < t < 2: \qquad h_{eq}(t) = \int_0^1 \tau d\tau + \int_0^1 (2-\tau) d\tau = -\frac{t^2}{2} + 2t - 1$$

$$t > 2: \qquad h_{eq}(t) = \int_0^1 \tau d\tau + \int_1^2 (2-\tau) d\tau = 1$$

$$y(t) = \begin{cases} 0, & t < 0 \\ \dfrac{t^2}{2}, & 0 < t < 1 \\ -\dfrac{t^2}{2} + 2t - 1, & 1 < t < 2 \\ 1, & t > 2 \end{cases}$$

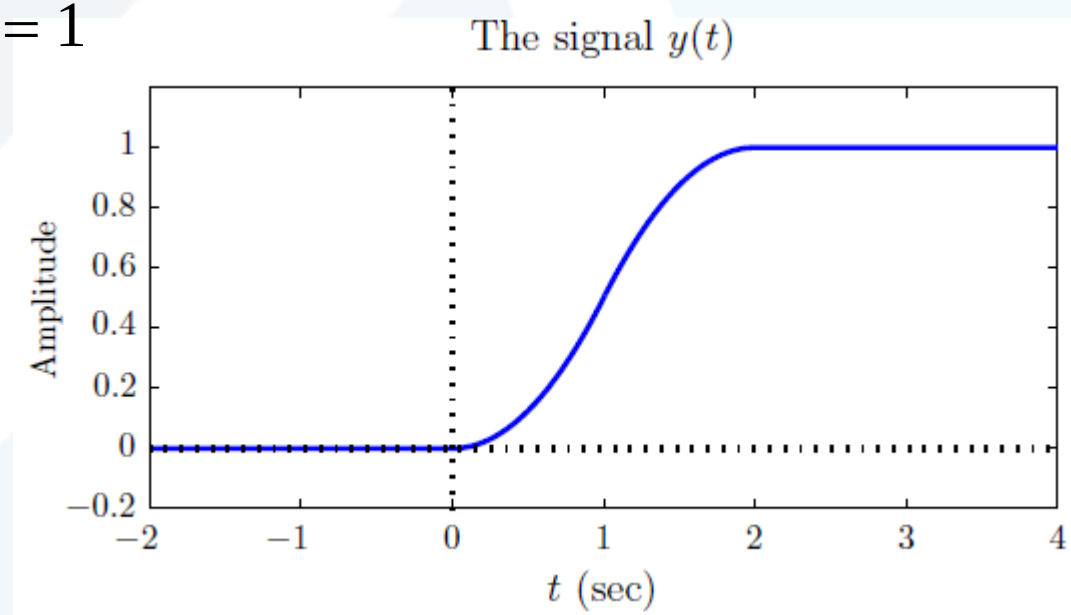

9. Determine the impulse response $h_{eq}(t)$ of the equivalent system:

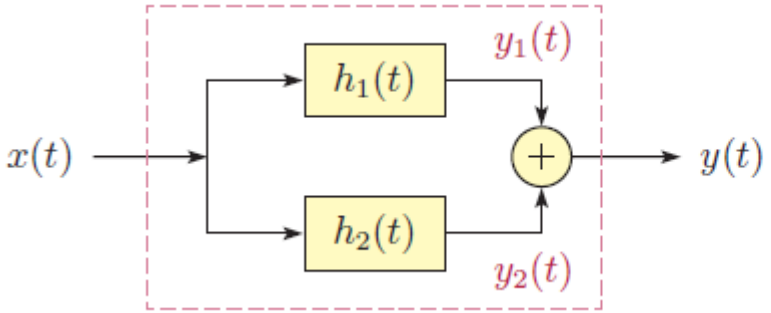

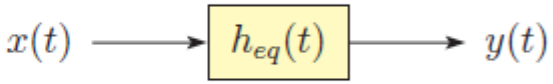

$$h_{eq}(t) = h_1(t) + h_2(t)$$

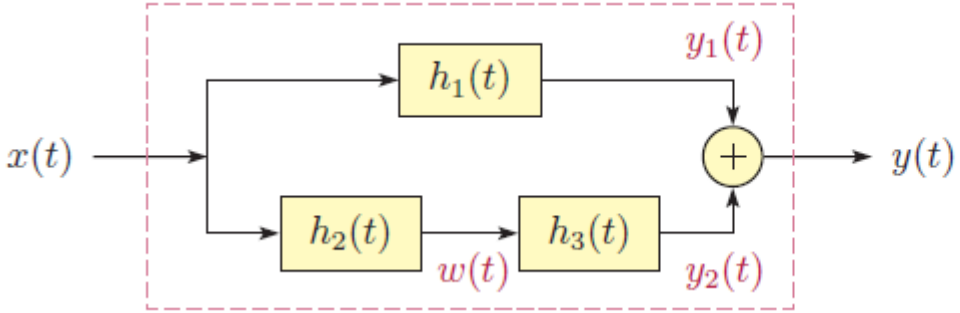

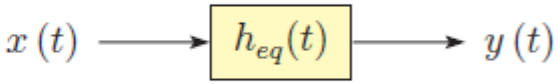

$$h_{eq}(t) = h_1(t) + h_2(t) * h_3(t)$$

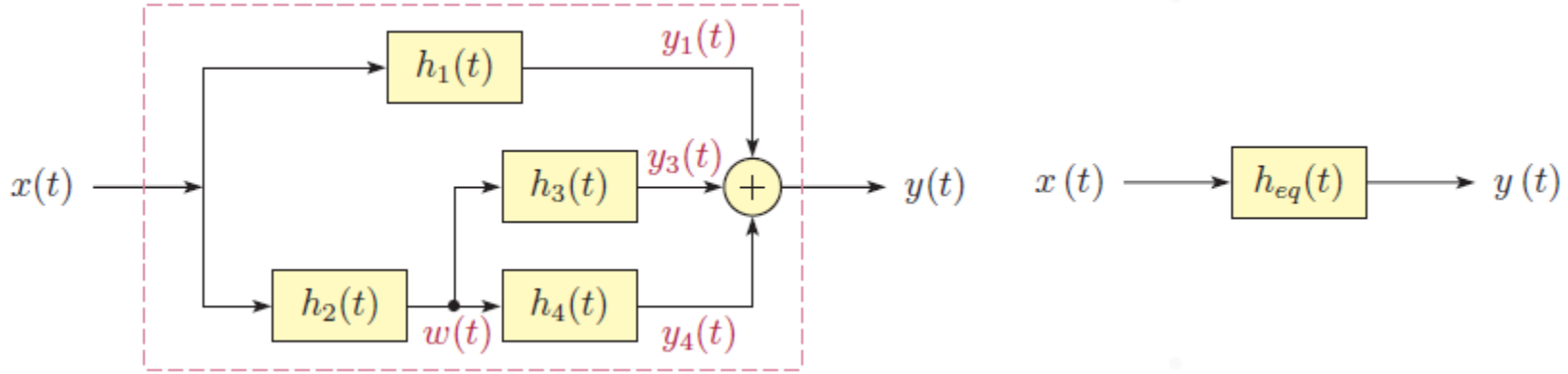

$$h_{eq}(t) = h_1(t) + h_2(t) * h_3(t) + h_2(t) * h_4(t)$$

10. The impulse response of a CTLTI system is:

$$h(t) = \delta(t) - \delta(t-1)$$

Determine sketch the response of this system to the triangular waveform

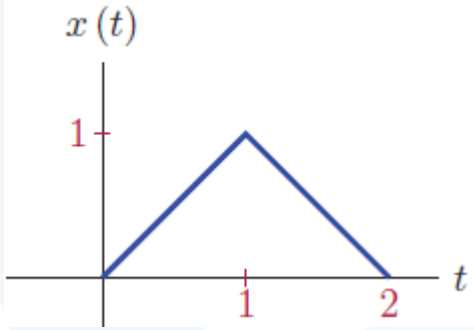

$$y(t) = \int_{-\infty}^{\infty} h(\tau)x(t-\tau)d\tau = \int_{-\infty}^{t} [\delta(\tau) - \delta(t-1)]x(t-\tau)d\tau$$

$$= \int_{-\infty}^{\infty} \delta(\tau)x(t-\tau)d\tau - \int_{-\infty}^{\infty} \delta(\tau-1)x(t-\tau)d\tau$$

$$= x(t) - x(t-1)$$

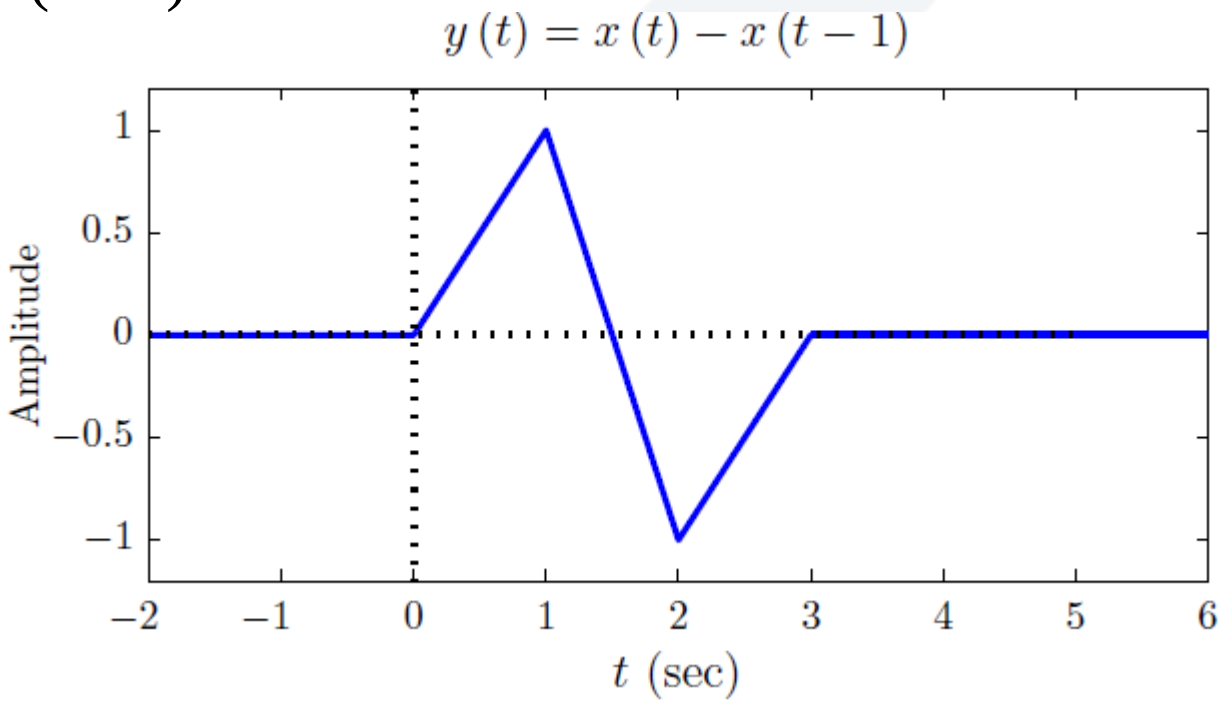

11. For each pair of signals $x(t)$ and $h(t)$ given below, find the convolution $y(t) = x(t) * h(t)$.

a. $x(t) = u(t), \quad h(t) = e^{-2t}u(t)$

b. $x(t) = u(t-2), \quad h(t) = e^{-2t}u(t)$

c. $x(t) = u(t) - u(t-2), \quad h(t) = e^{-2t}u(t)$

d. $x(t) = e^{-t}u(t), \quad h(t) = e^{-2t}u(t)$

$$a.\ y(t) = \begin{cases} \frac{1}{2}(1 - e^{-2t}), & t \geq 0 \\ 0, & t < 0 \end{cases}$$

$$b.\ y(t) = \begin{cases} \frac{1}{2}(1 - e^{-2(t-2)}), & t \geq 2 \\ 0, & t < 2 \end{cases}$$

$$c.\ y(t) = \begin{cases} \frac{1}{2}(e^{4} - 1)e^{-2t}, & t \geq 2 \\ \frac{1}{2}(1 - e^{-2t}), & 0 \leq t < 2 \\ 0 & t < 0 \end{cases}$$

$$d.\ y(t) = \begin{cases} e^{-t} - e^{-2t}, & t \geq 0 \\ 0, & t < 0 \end{cases}$$

12. For each pair of signals $x(t)$ and $h(t)$ given below, find the convolution $y(t) = x(t) * h(t)$ first graphically, and then analytically.

$$a.\ x(t) = \Pi\left(\frac{t-2}{4}\right), \quad h(t) = u(t)$$

$$b.\ x(t) = 3\Pi\left(\frac{t-2}{4}\right), \quad h(t) = e^{-t}u(t)$$

$$c.\ x(t) = \Pi\left(\frac{t-2}{4}\right), \quad h(t) = \Pi\left(\frac{t-3}{6}\right)$$

$$a.\ y(t) = \int_{-\infty}^{\infty} \Pi\left(\frac{\tau - 2}{4}\right) u(t-\tau)d\tau = \int_{0}^{4} u(t-\tau)d\tau$$

$$t < 0: \qquad y(t) = 0$$

$$0 \le t < 4: \quad y(t) = \int_{0}^{t} d\tau = t$$

$$t \ge 4: \qquad y(t) = \int_{0}^{1} d\tau = 4$$

$$b.\ y(t) = \int_{-\infty}^{\infty} 3\Pi\left(\frac{\tau - 2}{4}\right) e^{-(t-\tau)} u(t-\tau)d\tau = \int_{0}^{4} 3e^{-(t-\tau)} u(t-\tau)d\tau$$

$$t < 0: \qquad y(t) = 0$$

$$0 \le t < 4: \quad y(t) = \int_{0}^{t} 3e^{-(t-\tau)} d\tau = 3(1 - e^{-t})$$

$$t \ge 4: \qquad y(t) = \int_{0}^{4} 3e^{-(t-\tau)} d\tau = 3e^{-t}(e^{4} - 1)$$

$$c.\ y(t) = \int_{-\infty}^{\infty} \Pi\left(\frac{\tau - 2}{4}\right)\Pi\left(\frac{t - \tau - 3}{6}\right)d\tau = \int_{0}^{4} \Pi\left(\frac{t - \tau - 3}{6}\right)d\tau$$

$t < 0$: $\quad y(t) = 0$

$0 \le t < 4$: $\quad y(t) = \int_{0}^{t} d\tau = t$

$4 \le t < 6$: $\quad y(t) = \int_{0}^{4} d\tau = 4$

$6 \le t < 10$: $\quad y(t) = \int_{t-6}^{4} d\tau = 10 - t$

$t \ge 10$ $\quad y(t) = 0$

13. The system shown represents addition of echos to the signal $x(t)$:

$$y(t) = x(t) + \alpha_1 x(t-\tau_1) + \alpha_2 x(t-\tau_2)$$

Comment on the system's

a. Linearity

b. Time invariance

c. Causality

d. Stability

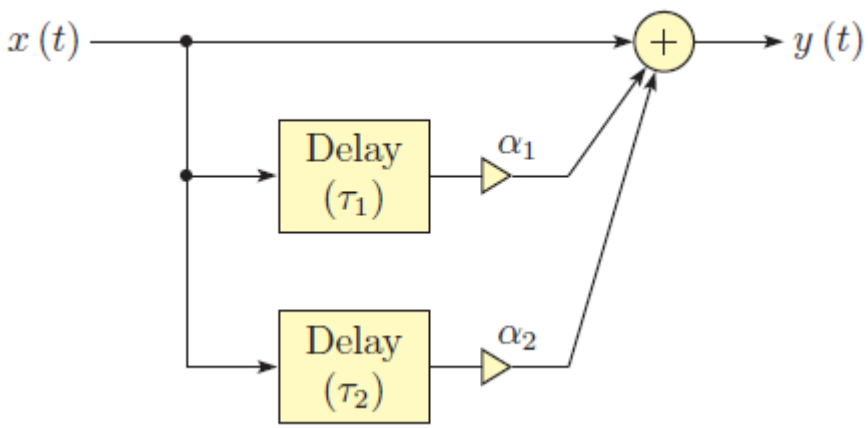

a. The system is time-invariant.

b. The system is linear.

c. The system is causal provided that $\tau_1 > 0$ and $\tau_2 > 0$.

d. The system is stable provided that $\alpha_1, \alpha_2 < \infty$.

14. For each system described below find the impulse response. Afterwards determine if the system is causal and/or stable.

$$a.\ y(t) = T\{x(t)\} = \int_{-\infty}^{t} x(\tau)d\tau$$

$$b.\ y(t) = T\{x(t)\} = \int_{t-T}^{t} x(\tau)d\tau, \quad T > 0$$

$$c.\ y(t) = T\{x(t)\} = \int_{t-T}^{t+T} x(\tau)d\tau, \quad T > 0$$

$$a.\ h(t) = T\{\delta(t)\} = \int_{-\infty}^{t} \delta(\tau)d\tau = \begin{cases} 1, & t > 0 \\ 0, & \text{otherwise} \end{cases}$$

$$h(t) = u(t)$$

Since $h(t) = 0$ for $t < 0$, the system is causal. However, since $h(t)$ is not absolute summable, the system is not stable.

$$b.\ h(t) = T\{\delta(t)\} = \int_{t-T}^{t} \delta(\tau)d\tau = \begin{cases} 1, & 0 < t < T \\ 0, & \text{otherwise} \end{cases}$$

$$h(t) = \Pi\left(\frac{t - T/2}{T}\right)$$

Since $h(t) = 0$ for $t < 0$, the system is causal. Also, since $h(t)$ is absolute summable, the system is stable.

$$c.\ h(t) = T\{\delta(t)\} = \int_{t-T}^{t+T} \delta(\tau)d\tau = \begin{cases} 1, & -T < t < T \\ 0, & \text{otherwise} \end{cases}$$

$$h(t) = \Pi\left(\frac{t}{2T}\right)$$

Since $h(t)$ has nonzero values for some $t < 0$, the system is not causal. It is stable, however, $h(t)$ is absolute summable.

15. Consider the RLC circuit shown, where the input is a voltage source $x(t)$ and the output the voltage $y(t)$ across the capacitor. Let LC = 1 and R/L = 2. Find the impulse response $h(t)$ of the circuit.

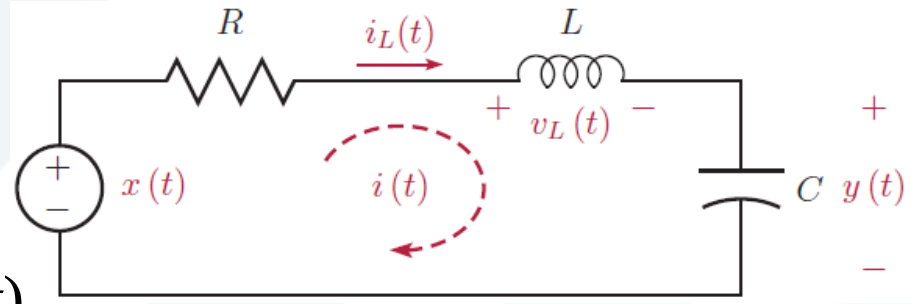

$$x(t) = y(t) + L\frac{di(t)}{dt} + Ri(t)$$

$$Q(t) = Cy(t) \Rightarrow i(t) = C\frac{dy(t)}{dt} \Rightarrow \frac{di(t)}{dt} = C\frac{d^2y(t)}{dt^2}$$

$$\frac{d^2y(t)}{dt^2} + \frac{L}{C}\frac{dy(t)}{dt} + \frac{1}{LC}y(t) = \frac{1}{LC}x(t)$$

$$\frac{d^2y(t)}{dt^2} + 2\frac{dy(t)}{dt} + y(t) = x(t)$$

$$x(t) = u(t) \Rightarrow y(t) = s(t) = ae^{-t} + bte^{-t} + 1$$ unit-step response

To find the impulse response of this circuit, the initial conditions be zero.

$$y(0) = 0 \Rightarrow a = 0, \quad i(0) = C\left.\frac{dy(t)}{dt}\right|_{t=0} = 0 \Rightarrow a = b = -1$$

$$s(t) = [1 - (1+t)e^{-t}]u(t)$$

$$h(t) = \frac{ds(t)}{dt} = te^{-t}u(t)$$

Another method:

$$\ddot{y}(t) + 2\dot{y}(t) + y(t) = \delta(t)$$

$$y(0^+) = 0, \dot{y}(0^+) = 1$$

$$h(t) = ae^{-t}u(t) + bte^{-t}u(t)$$

$$h(t) = te^{-t}u(t)$$

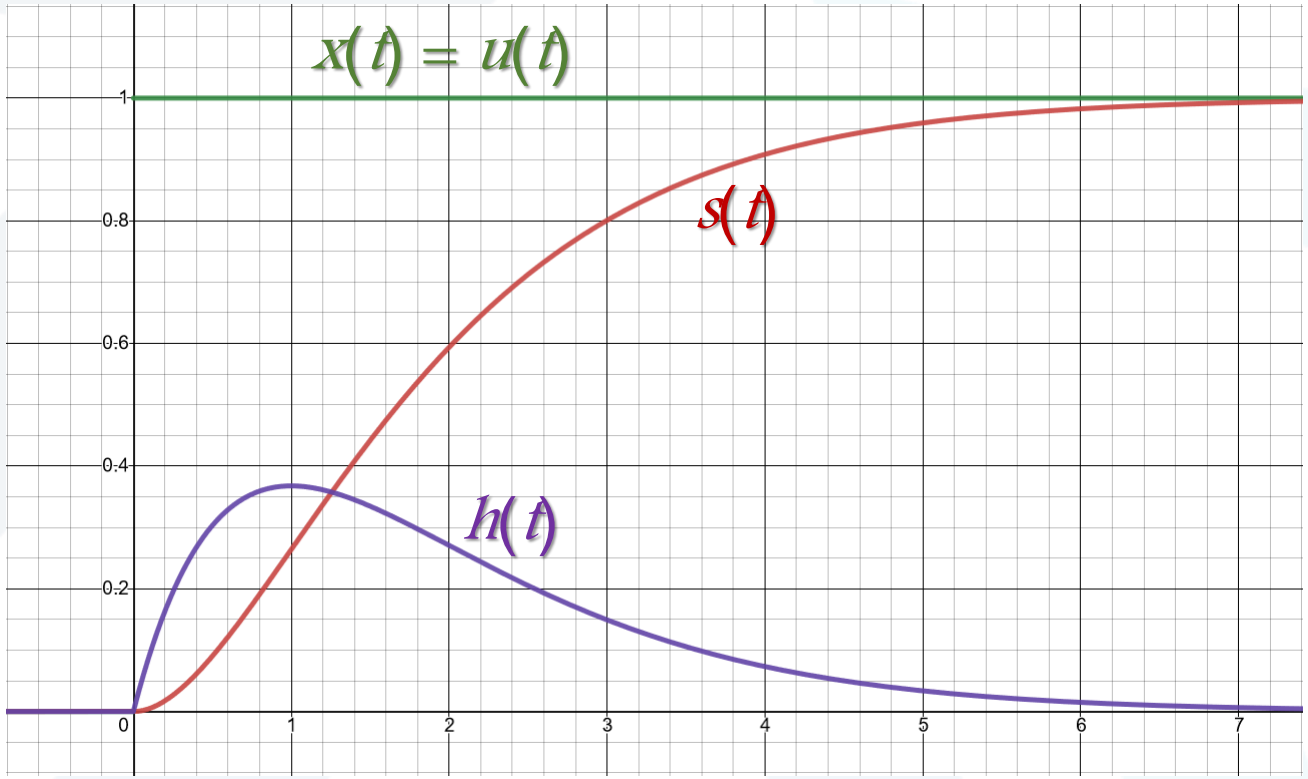

16. Determine the step response of the RC circuit using the convolution operation.

$$y(t) = \int_{-\infty}^{\infty} x(\tau)h(t-\tau)d\tau \qquad h(t) = \frac{1}{RC}e^{-t/RC}u(t)$$

For $t \le 0$, $s(t) = y(t) = 0$

For $t > 0$,

$$s(t) = y(t) = \int_0^t h(t-\tau)d\tau$$

$$s(t) = \frac{1}{RC}e^{-(t-\tau)/RC}d\tau = 1 - e^{-t/RC}$$

So, $s(t) = \left(1 - e^{-t/RC}\right)u(t)$

Note: $\dfrac{ds(t)}{dt} = \dfrac{1}{RC}e^{-t/RC}u(t) = h(t)$

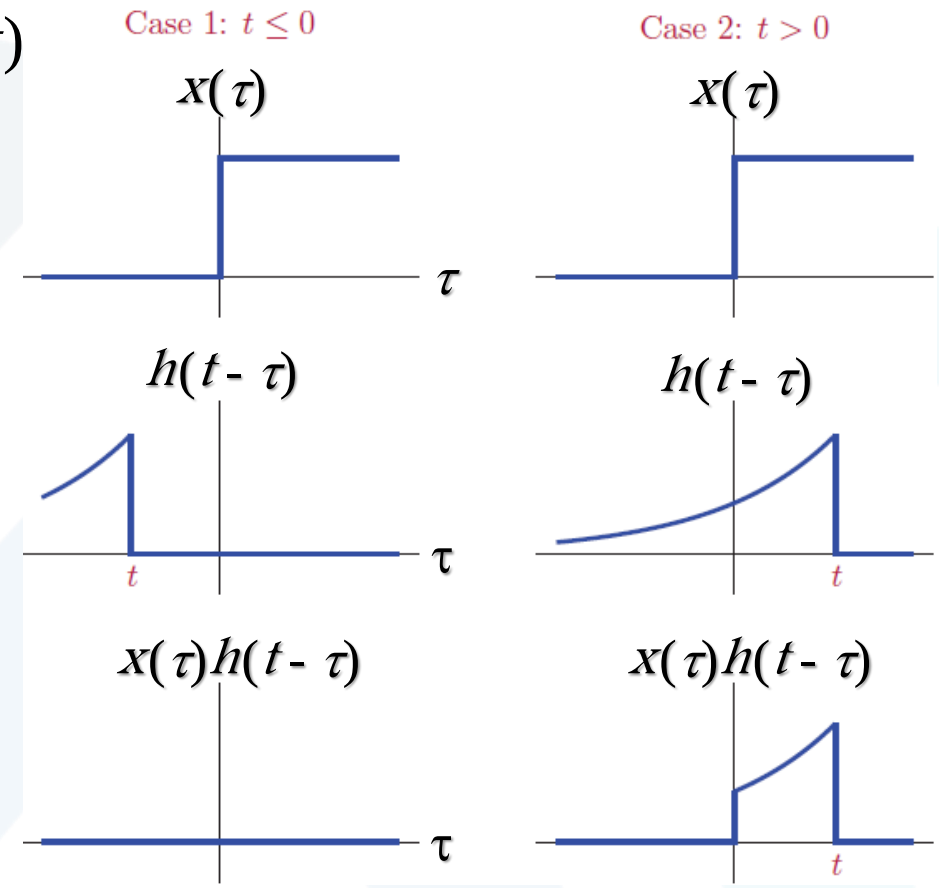

17. Using convolution, determine the response of the RC circuit to a unit-pulse input signal $x(t) = \Pi(t)$.

Case 1: $t \leq ½$, $y(t) = 0$

Case 2: $-½ < t \leq ½$,

$$y(t) = \int_{-1/2}^{t} \frac{1}{RC} e^{-(t-\tau)/RC} d\tau$$

$$y(t) = 1 - e^{-(t+1/2)/RC}$$

Case 3: $t > ½$,

$$y(t) = \int_{-1/2}^{1/2} \frac{1}{RC} e^{-(t-\tau)/RC} d\tau$$

$$y(t) = e^{-t/RC}\left(e^{1/2RC} - e^{-1/2RC}\right)$$

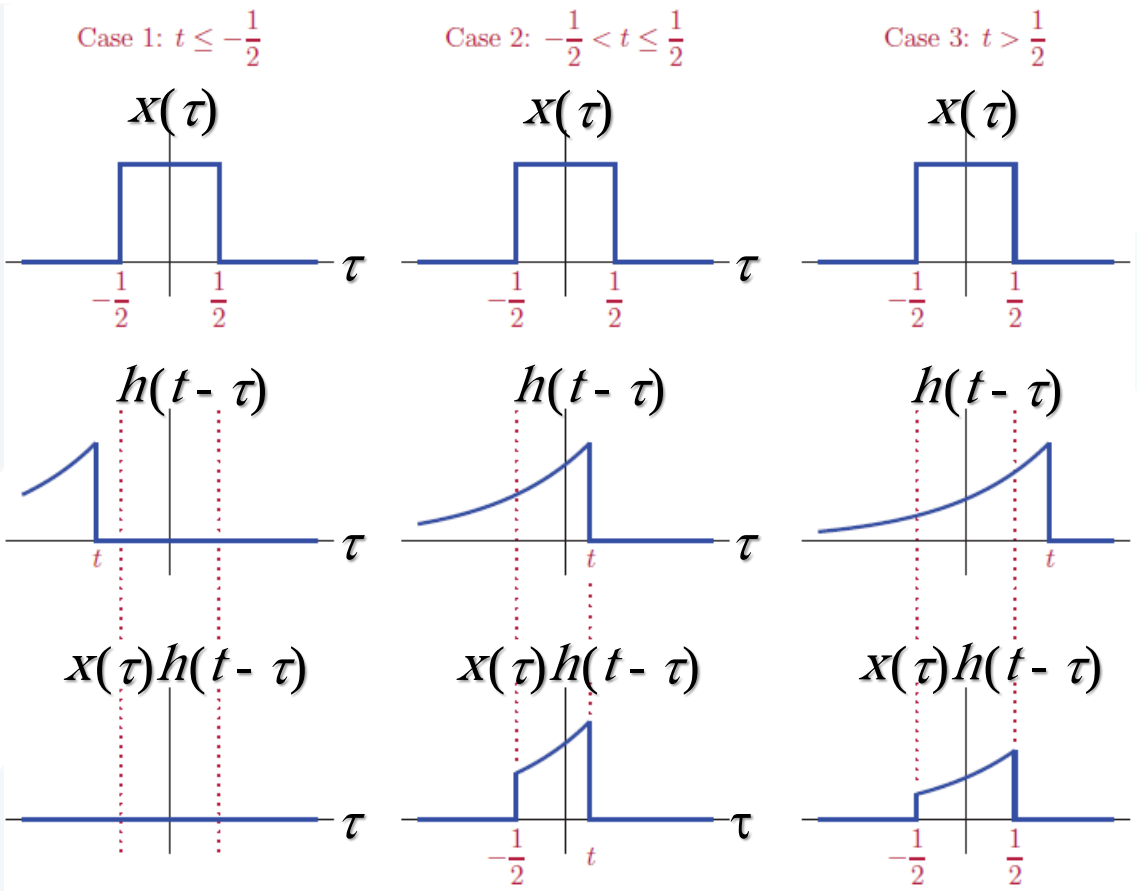

$$y(t) = \begin{cases} 0 & t \le -\frac{1}{2} \\ 1 - e^{-(t+1/2)/RC} & -\frac{1}{2} < t \le \frac{1}{2} \\ e^{-t/RC}\left(e^{1/2RC} - e^{-1/2RC}\right) & t > \frac{1}{2} \end{cases}$$

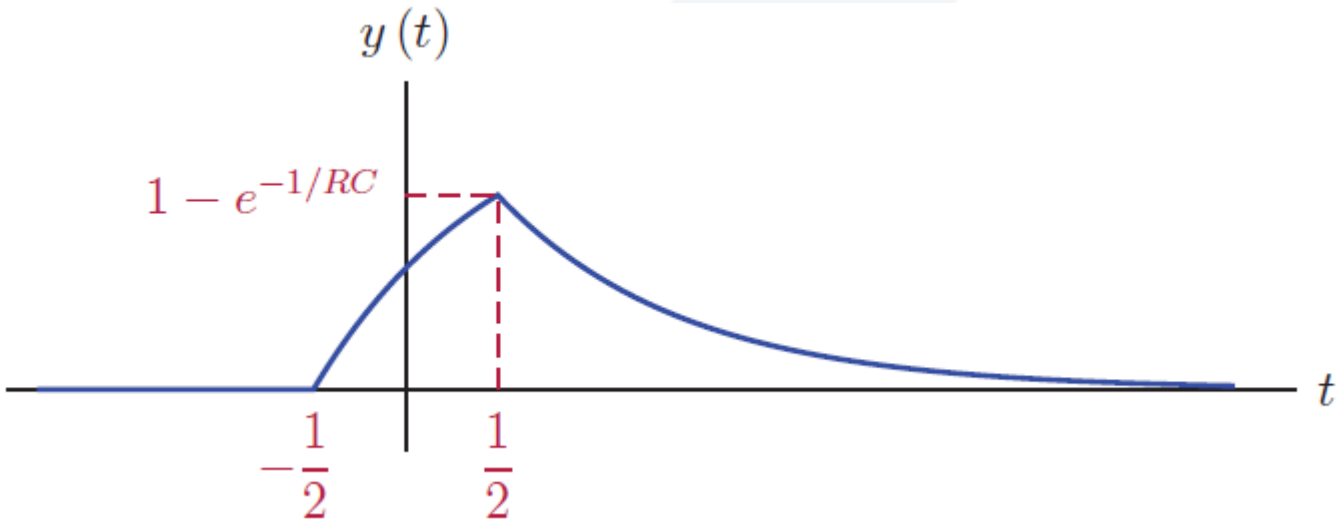

18. Consider a system with the impulse response $h(t) = e^{-t}[u(t) - u(t-2)]$

Let the input signal applied to this system be

$$x(t) = \prod(t-0.5) - \prod(t-1.5) = \begin{cases} 1 & 0 \le t < 1 \\ -1 & 1 \le t < 2 \\ 0 & \text{otherwise} \end{cases}$$

Determine the output signal $y(t)$ using convolution.

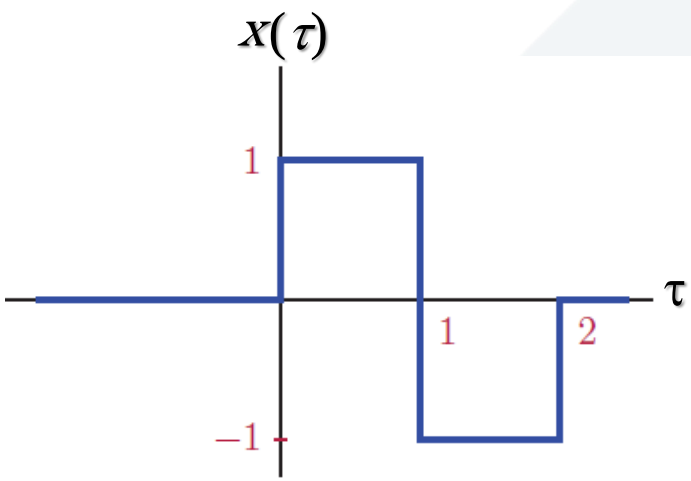

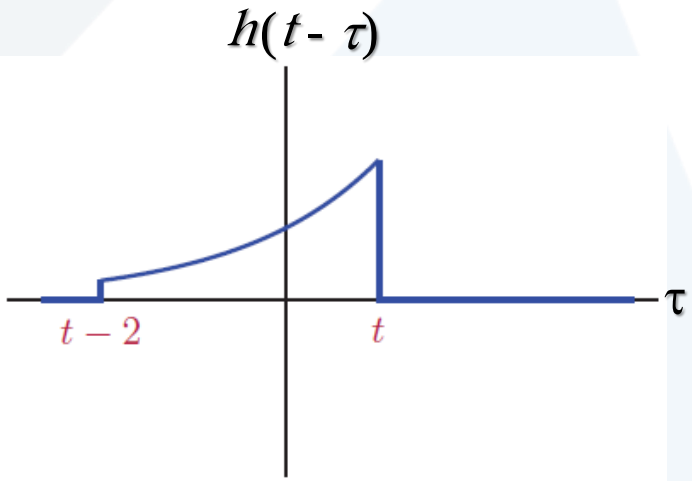

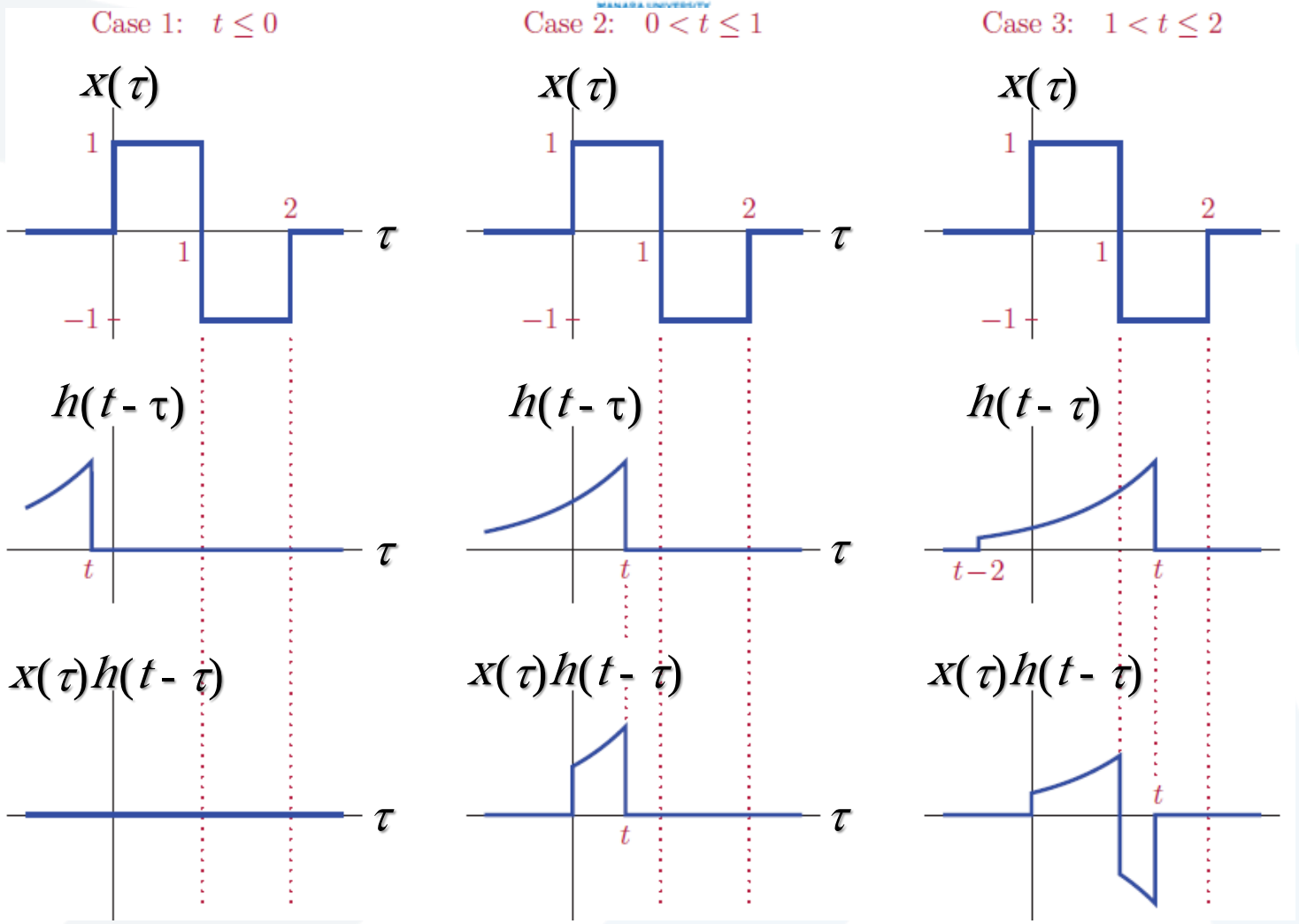
Case 1: $t \le 0$
Case 2: $0 < t \le 1$
Case 3: $1 < t \le 2$
$x(\tau)$
$h(t-\tau)$
$x(\tau)h(t-\tau)$
τ
1
2
−1
t
$t-2$

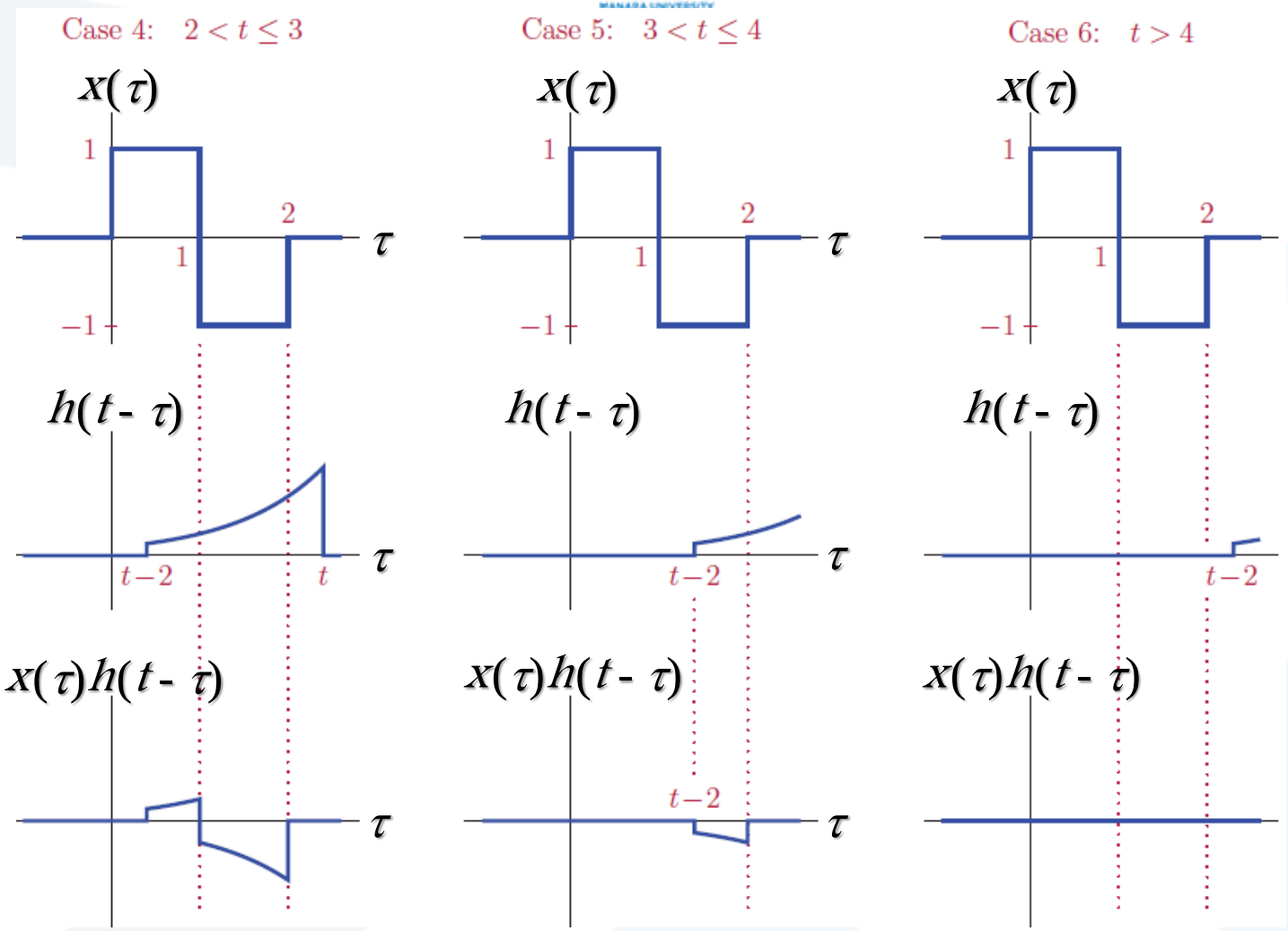
Case 4: $2 < t \leq 3$
Case 5: $3 < t \leq 4$
Case 6: $t > 4$
$x(\tau)$
$h(t-\tau)$
$x(\tau)h(t-\tau)$
τ
1
2
−1
$t-2$
t

Case 1: $t \le 0$, $y(t) = 0$

Case 2: $0 < t \le 1$, $y(t) = \int_0^t (1)e^{-(t-\tau)}d\tau = 1 - e^{-t}$

Case 3: $1 < t \le 2$, $y(t) = \int_0^1 (1)e^{-(t-\tau)}d\tau + \int_0^t (-1)e^{-(t-\tau)}d\tau = -1 + 4.4366e^{-t}$

Case 4: $2 < t \le 3$, $y(t) = \int_{t-2}^1 (1)e^{-(t-\tau)}d\tau + \int_1^2 (-1)e^{-(t-\tau)}d\tau = -0.1353 - 1.9525e^{-t}$

Case 5: $3 < t \le 4$, $y(t) = \int_{t-2}^2 (-1)e^{-(t-\tau)}d\tau = -0.1353 - 7.3891e^{-t}$

Case 6: $t > 4$, $y(t) = 0$

$$x(t) = \begin{cases} 0, & t \le 0 \text{ or } t > 4 \\ 1 - e^{-t}, & 0 < t \le 1 \\ -1 + 4.4366e^{-t}, & 1 < t \le 2 \\ -0.1353 - 1.9525e^{-t}, & 2 < t \le 3 \\ -0.1353 - 7.3891e^{-t}, & 3 < t \le 4 \end{cases}$$

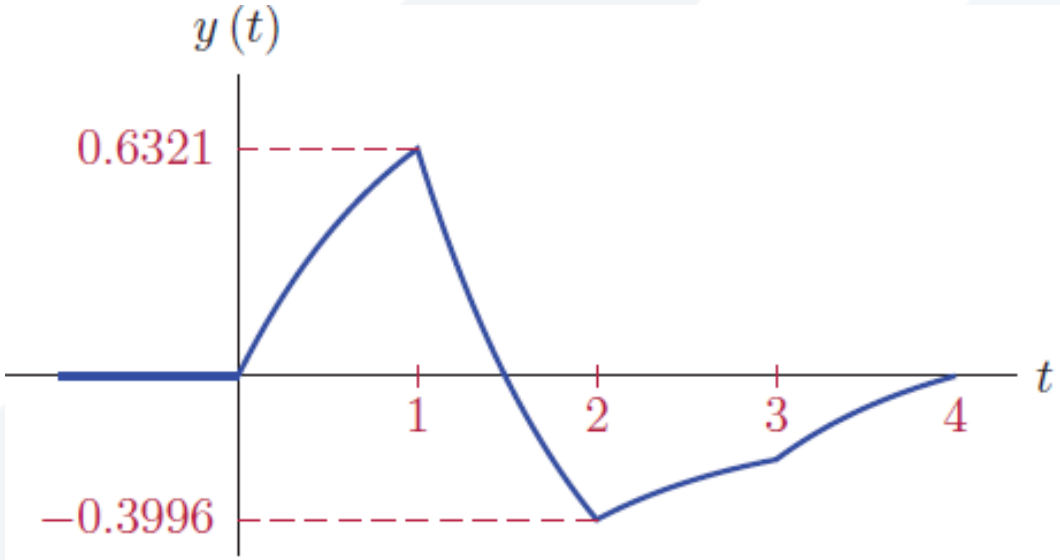

19. A voltage $x(t) = 10e^{-3t}u(t)$ is applied at the input of the RLC circuit. Find the output voltage $v_C(t) = y(t)$ for $t \geq 0$ if the initial inductor current is $i_L(0^-) = 0$, and the initial capacitor voltage $v_C(0^-) = 5$ V. Use $R = 3\ \Omega$, $L = 1$ H and $C = 1/2$ F.

$$\frac{d^2y(t)}{dt^2} + 3\frac{dy(t)}{dt} + 2y(t) = 2x(t) \qquad y_h(t) = c_1e^{-t} + c_2e^{-2t},\ t \geq 0$$

$$y_p(t) = ke^{-3t} \Rightarrow k = 10 \Rightarrow y_p(t) = 10e^{-3t}$$

$$y(t) = c_1e^{-t} + c_2e^{-2t} + 10e^{-3t},\ t \geq 0 \qquad y(0^+) = y(0^-) = 5, \qquad \frac{dy}{dt}(0^+) = \frac{i(0^+)}{C} = \frac{i(0^-)}{C} = 0$$

$$\Rightarrow c_1 = 20,\ c_2 = -25$$

$$y(t) = \underbrace{20e^{-t} - 25e^{-2t}}_{y_n(t)} + \underbrace{10e^{-3t}}_{y_\phi(t)},\ t \geq 0$$

$$\frac{d^2y_{zi}(t)}{dt^2} + 3\frac{dy_{zi}(t)}{dt} + 2y_{zi}(t) = 0, \quad y_{zi}(0^-) = 5, \ \frac{dy_{zi}}{dt}(0^-) = 0$$

$$y_{zi}(t) = 10e^{-t} - 5e^{-2t}, \ t \geq 0$$

$$\frac{d^2y_{zs}(t)}{dt^2} + 3\frac{dy_{zs}(t)}{dt} + 2y_{zs}(t) = 20e^{-3t}$$

$$y_{zs}(0^+) = y(0^+) - y(0^-) = 0, \quad \frac{dy_{zs}}{dt}(0^+) = \frac{dy}{dt}(0^+) - \frac{dy}{dt}(0^-) = 0$$

$$y_{zs}(t) = 10e^{-t} - 20e^{-2t} + 10e^{-3t}, \ t \geq 0$$

$$y(t) = \underbrace{10e^{-t} - 5e^{-2t}}_{y_{zi}(t)} + \underbrace{10e^{-t} - 20e^{-2t} + 10e^{-3t}}_{y_{zs}(t)}, \ t \geq 0$$

$$y(t) = \underbrace{20e^{-t} - 25e^{-2t} + 10e^{-3t}}_{y_t(t)}, \ t \geq 0$$

- Note: Post-initial conditions = Pre-initial conditions.

20. Find the output loop current $i_L(t) = y(t)$ for $t \geq 0$ for the circuit described in exercise 19.

$$\frac{d^2y(t)}{dt^2} + 3\frac{dy(t)}{dt} + 2y(t) = \frac{dx(t)}{dt} \qquad y_h(t) = c_1e^{-t} + c_2e^{-2t},\ t \geq 0$$

$$y_p(t) = ke^{-3t} \Rightarrow k = 10 \Rightarrow y_p(t) = -15e^{-3t}$$

$$y(t) = c_1e^{-t} + c_2e^{-2t} - 15e^{-3t},\ t \geq 0$$

The current $y(0^+) = y(0^-) = 0$ because it cannot change instantaneously in the absence of impulsive voltage. The same is true of the capacitor voltage. Hence, $v_C(0^+) = v_C(0^-) = 5$.

$$x(0^+) = v_C(0^+) + 3i_L(0^+) + \frac{di_L}{dt}(0^+) \Rightarrow \frac{dy}{dt}(0^+) = \frac{di_L}{dt}(0^+) = 5$$

$$\begin{cases} c_1 + c_2 - 15 = 0 \\ -\alpha - 2\beta + 45 = 5 \end{cases} \Rightarrow \begin{cases} c_1 = -10 \\ c_2 = 25 \end{cases}$$

$$y(t) = \underbrace{-10e^{-t} + 25e^{-2t}}_{y_n(t)} - \underbrace{15e^{-3t}}_{y_\phi(t)}, \; t \geq 0$$

$$\frac{d^2 y_{zi}(t)}{dt^2} + 3\frac{dy_{zi}(t)}{dt} + 2y_{zi}(t) = 0, \Rightarrow y_{zi}(t) = \alpha e^{-t} + \beta e^{-2t}, \; t \geq 0$$

$$y_{zi}(0^-) = 0, \qquad x(0^-) = v_C(0^-) + 3i_L(0^-) + \frac{di_L}{dt}(0^-) \Rightarrow \frac{dy_{zi}}{dt}(0^-) = \frac{di_L}{dt}(0^-) = -5$$

$$\begin{cases} \alpha + \beta = 0 \\ -\alpha - 2\beta = -5 \end{cases} \Rightarrow \begin{cases} \alpha = -5 \\ \beta = 5 \end{cases}$$

$$y_{zi}(t) = -5e^{-t} + 5e^{-2t}, \; t \geq 0$$

$$\frac{d^2 y_{zs}(t)}{dt^2} + 3\frac{dy_{zs}(t)}{dt} + 2y_{zs}(t) = -30e^{-3t}$$

$$y_{zs}(t) = \alpha e^{-t} + \beta e^{-2t} - 15e^{-3t}$$

$$y_{zs}(0^+) = y(0^+) - y(0^-) = 0, \qquad \frac{dy_{zs}}{dt}(0^+) = \frac{dy}{dt}(0^+) - \frac{dy}{dt}(0^-) = 10$$

$$\begin{cases} \alpha + \beta - 15 = 0 \\ -\alpha - 2\beta + 45 = 10 \end{cases} \Rightarrow \begin{cases} \alpha = -5 \\ \beta = 20 \end{cases}$$

$$y_{zs}(t) = -5e^{-t} + 20e^{-2t} - 15e^{-3t},\ t \geq 0$$

$$y(t) = \underbrace{-5e^{-t} + 5e^{-2t}}_{y_{zi}(t)} + \underbrace{-5e^{-t} + 20e^{-2t} - 15e^{-3t}}_{y_{zs}(t)},\ t \geq 0$$

Note: Post-initial conditions $\neq$ Pre-initial conditions.

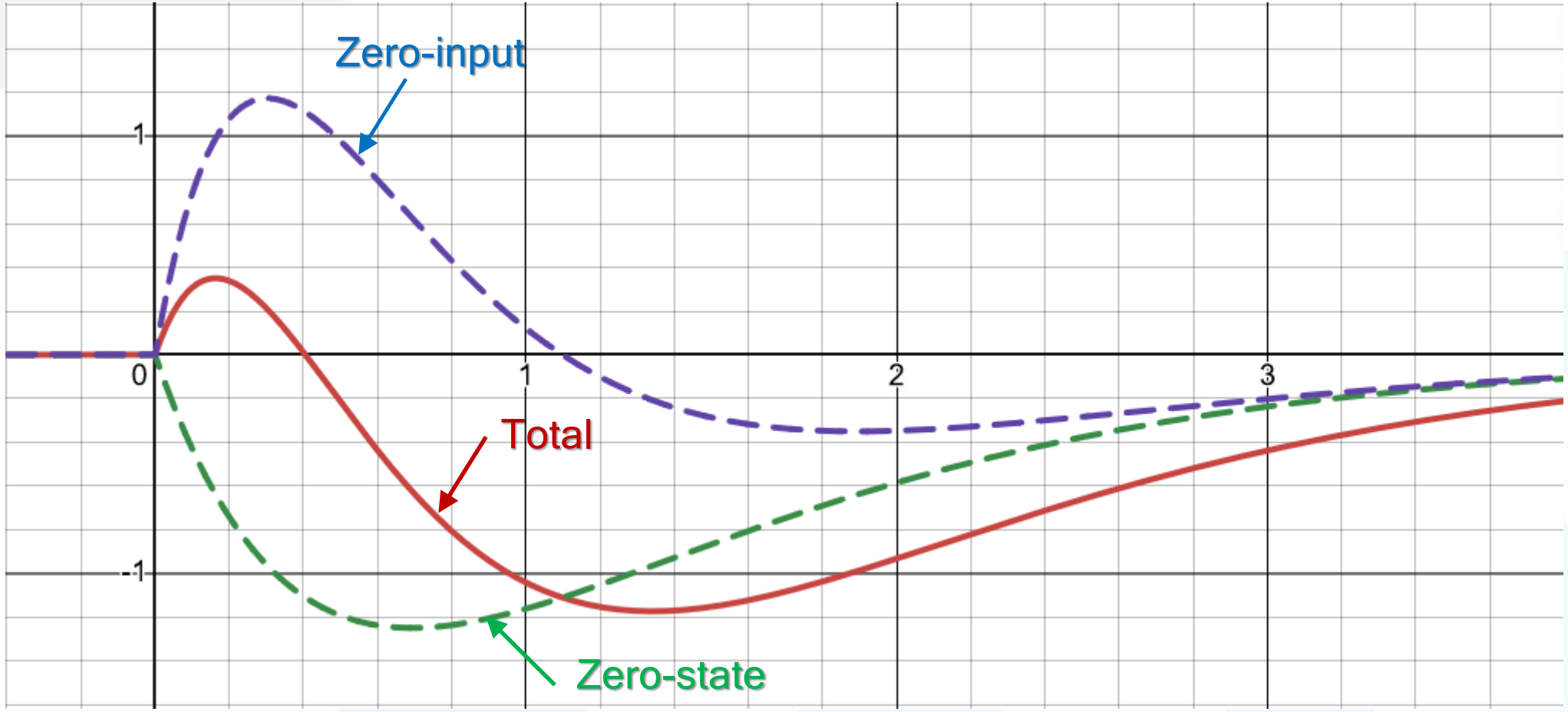
Zero-input
Total
Zero-state
1
-1
0
1
2
3