CECC122: Linear Algebra and Matrix Theory

Lecture Notes 10: Linear Transformations: Part B

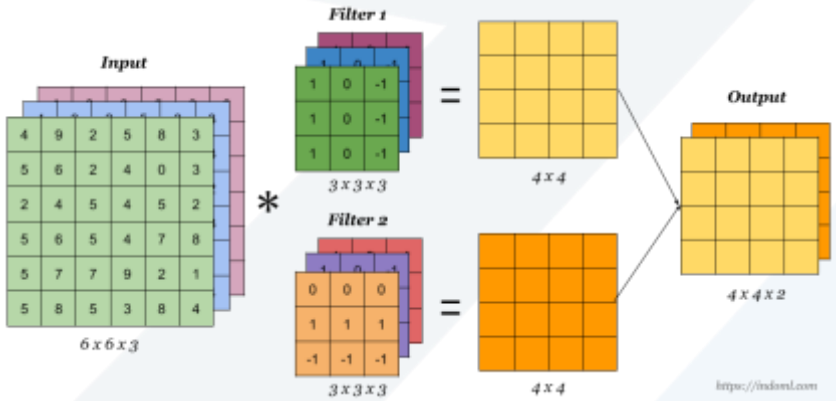

Ramez Koudsieh, Ph.D.

Faculty of Engineering

Department of Informatics

Manara University

6.3 Matrices for Linear Transformations

- Two representations of the linear transformation $T: R^3 \rightarrow R^3$

$$(1)\ T(x_1, x_2, x_3) = (2x_1 + x_2 - x_3, -x_1 + 3x_2 - 2x_3, 3x_2 + 4x_3)$$

$$(2)\ T(\boldsymbol{x}) = A\boldsymbol{x} = \begin{bmatrix} 2 & 1 & -1 \\ -1 & 3 & -2 \\ 0 & 3 & 4 \end{bmatrix} \begin{bmatrix} x_1 \\ x_2 \\ x_3 \end{bmatrix}$$

- Three reasons for matrix representation of a linear transformation:
  - It is simpler to write.
  - It is simpler to read.
  - It is more easily adapted for computer use.

- Theorem 6.9: (Standard matrix for a linear transformation)

Let $T: R^n \to R^m$ be a linear transformation such that

$$T(\boldsymbol{e_1}) = \begin{bmatrix} a_{11} \\ a_{21} \\ \vdots \\ a_{m1} \end{bmatrix}, \quad T(\boldsymbol{e_2}) = \begin{bmatrix} a_{12} \\ a_{22} \\ \vdots \\ a_{m2} \end{bmatrix}, \cdots, \quad T(\boldsymbol{e_n}) = \begin{bmatrix} a_{1n} \\ a_{2n} \\ \vdots \\ a_{mn} \end{bmatrix},$$

then the $m x n$ matrix whose n columns correspond to $T(\boldsymbol{e_i})$

$$A = \left[T(\boldsymbol{e_1}) \,|\, T(\boldsymbol{e_2}) \,|\, \cdots \,|\, T(\boldsymbol{e_n}) \right] = \begin{bmatrix} a_{11} & a_{12} & \cdots & a_{1n} \\ a_{21} & a_{22} & \cdots & a_{2n} \\ \vdots & \vdots & \ddots & \vdots \\ a_{m1} & a_{m2} & \cdots & a_{mn} \end{bmatrix}$$

is such that $T(\boldsymbol{v}) = A\boldsymbol{v}$ for every $\boldsymbol{v}$ in R^n. A is called the standard matrix for T

- Ex 1: (Finding the standard matrix of a linear transformation)

Find the standard matrix for the L.T. $T: R^3 \to R^2$ defined by $T(x,y,z) = (x - 2y,\ 2x + y)$

Sol:

Vector Notation	Matrix Notation
$T(\boldsymbol{e}_1) = T(1,\ 0,\ 0) = (1,\ 2)$	$T(\boldsymbol{e}_1) = T(\begin{bmatrix} 1 \\ 0 \\ 0 \end{bmatrix}) = \begin{bmatrix} 1 \\ 2 \end{bmatrix}$
$T(\boldsymbol{e}_2) = T(0,\ 1,\ 0) = (-2,\ 1)$	$T(\boldsymbol{e}_2) = T(\begin{bmatrix} 0 \\ 1 \\ 0 \end{bmatrix}) = \begin{bmatrix} -2 \\ 1 \end{bmatrix}$
$T(\boldsymbol{e}_3) = T(0,\ 0,\ 1) = (0,\ 0)$	$T(e_3) = T(\begin{bmatrix} 0 \\ 0 \\ 1 \end{bmatrix}) = \begin{bmatrix} 0 \\ 0 \end{bmatrix}$

$$A = \left[T(\boldsymbol{e}_1) \,|\, T(\boldsymbol{e}_2) \,|\, T(\boldsymbol{e}_3)\right] = \begin{bmatrix} 1 & -2 & 0 \\ 2 & 1 & 0 \end{bmatrix}$$

- Check:

$$A\begin{bmatrix} x \\ y \\ z \end{bmatrix} = \begin{bmatrix} 1 & -2 & 0 \\ 2 & 1 & 0 \end{bmatrix}\begin{bmatrix} x \\ y \\ z \end{bmatrix} = \begin{bmatrix} x - 2y \\ 2x + y \end{bmatrix} \qquad \text{i.e. } T(x,y,z) = (x - 2y, 2x + y)$$

- Notes:

(1) The standard matrix for the zero transformation from R^n into R^m is the $m \times n$ zero matrix.

(2) The standard matrix for the identity transformation from R^n into R^n is the $n \times n$ identity matrix I_n

- Composition of $T_1: R^n \to R^m$ with $T_2: R^m \to R^p$:

$$T(\boldsymbol{v}) = T_2(T_1(\boldsymbol{v})), \quad \boldsymbol{v} \in R^n$$

$$T = T_2 \circ T_1,$$

domain of T = domain of T_1

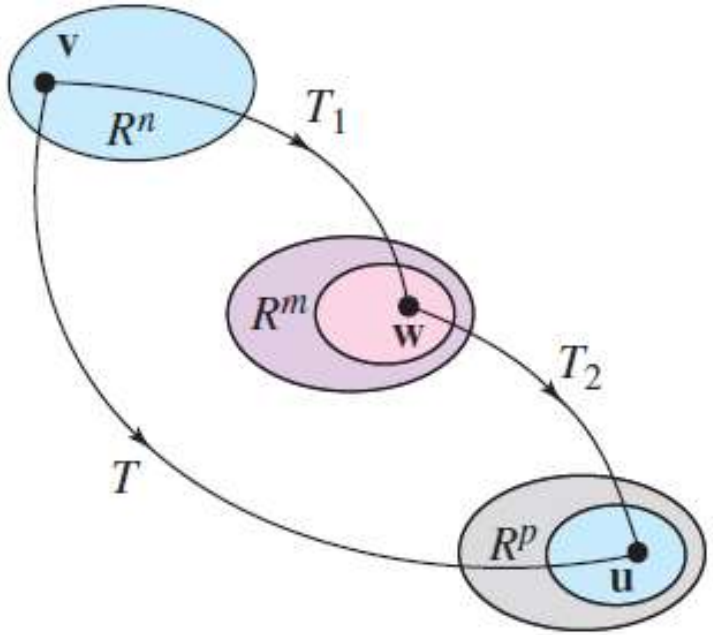

- Note: $T_1 \circ T_2 \neq T_2 \circ T_1$

- Theorem 6.10: (Composition of linear transformations)

Let $T_1: R^n \to R^m$ and $T_2: R^m \to R^p$ be L.T. with standard matrices A_1 and A_2, then

(1) The composition $T: R^n \to R^p$, defined by $T(\boldsymbol{v}) = T_2(T_1(\boldsymbol{v}))$, is a L. T.

(2) The standard matrix A for T is given the matrix product $A = A_2 A_1$

- Ex 2: (The standard matrix of a composition)

Let T_1 and T_2 be L. T. from R^3 into R^3 such that

$$T_1(x,y,z) = (2x + y,\ 0,\ x + z), \qquad T_2(x,y,z) = (x - y,\ z,\ y)$$

Find the standard matrices for the compositions

$$T = T_2 \circ T_1 \text{ and } T' = T_1 \circ T_2$$

Sol:

$$A_1 = \begin{bmatrix} 2 & 1 & 0 \\ 0 & 0 & 0 \\ 1 & 0 & 1 \end{bmatrix}, \qquad A_2 = \begin{bmatrix} 1 & -1 & 0 \\ 0 & 0 & 1 \\ 0 & 1 & 0 \end{bmatrix}$$

standard matrices for T_1 standard matrices for T_2

The standard matrix for $T = T_2 \circ T_1$

$$A = A_2 A_1 = \begin{bmatrix} 1 & -1 & 0 \\ 0 & 0 & 1 \\ 0 & 1 & 0 \end{bmatrix} \begin{bmatrix} 2 & 1 & 0 \\ 0 & 0 & 0 \\ 1 & 0 & 1 \end{bmatrix} = \begin{bmatrix} 2 & 1 & 0 \\ 1 & 0 & 1 \\ 0 & 0 & 0 \end{bmatrix}$$

The standard matrix for $T' = T_1 \circ T_2$

$$A' = A_1 A_2 = \begin{bmatrix} 2 & 1 & 0 \\ 0 & 0 & 0 \\ 1 & 0 & 1 \end{bmatrix} \begin{bmatrix} 1 & -1 & 0 \\ 0 & 0 & 1 \\ 0 & 1 & 0 \end{bmatrix} = \begin{bmatrix} 2 & -2 & 1 \\ 0 & 0 & 0 \\ 1 & 0 & 0 \end{bmatrix}$$

- Inverse linear transformation:

If $T_1: R^n \to R^n$ and $T_2: R^n \to R^n$ are L.T. such that for every $\boldsymbol{v}$ in R^n

$$T_2(T_1(\boldsymbol{v})) = \boldsymbol{v} \quad \text{and} \quad T_1(T_2(\boldsymbol{v})) = \boldsymbol{v}$$

Then T_2 is called the inverse of T_1 and T_1 is said to be invertible

- Note:

If the transformation T is invertible, then the inverse is unique and denoted by T^{-1}.

- Theorem 6.11: (Existence of an inverse transformation)

  Let $T: R^n \to R^n$ be a L.T. with standard matrices, then the following conditions are equivalent

  (1) T is invertible.

  (2) A is invertible.

- Note:

  If T is invertible with standard matrix A, then the standard matrix for T^{-1} is A^{-1}.

- Ex 3: (Finding the inverse of a linear transformation)

The L. T. $T: R^3 \to R^3$ defined by

$$T(x_1, x_2, x_3) = (2x_1 + 3x_2 + x_3,\ 3x_1 + 3x_2 + x_3,\ 2x_1 + 4x_2 + x_3)$$

Show that T is invertible, and find its inverse.

Sol:

The standard matrix for T

$$A = \begin{bmatrix} 2 & 3 & 1 \\ 3 & 3 & 1 \\ 2 & 4 & 1 \end{bmatrix} \begin{array}{l} \leftarrow 2x_1 + 3x_2 + x_3 \\ \leftarrow 3x_1 + 3x_2 + x_3 \\ \leftarrow 2x_1 + 4x_2 + x_3 \end{array}$$

$$[A \mid I_3] = \left[\begin{array}{ccc|ccc} 2 & 3 & 1 & 1 & 0 & 0 \\ 3 & 3 & 1 & 0 & 1 & 0 \\ 2 & 4 & 1 & 0 & 0 & 1 \end{array}\right]$$

$$\xrightarrow{\text{G.J. Elimination}} \left[\begin{array}{ccc|ccc} 1 & 0 & 0 & -1 & 1 & 0 \\ 0 & 1 & 0 & -1 & 0 & 1 \\ 0 & 0 & 1 & 6 & -2 & -3 \end{array}\right] = \left[I \mid A^{-1} \right]$$

Therefore T is invertible and the standard matrix for T^{-1} is A^{-1}.

$$A^{-1} = \begin{bmatrix} -1 & 1 & 0 \\ -1 & 0 & 1 \\ 6 & -2 & -3 \end{bmatrix}$$

$$T^{-1}(\boldsymbol{v}) = A^{-1}\boldsymbol{v} = \begin{bmatrix} -1 & 1 & 0 \\ -1 & 0 & 1 \\ 6 & -2 & -3 \end{bmatrix} \begin{bmatrix} x_1 \\ x_2 \\ x_3 \end{bmatrix} = \begin{bmatrix} -x_1 + x_2 \\ -x_1 + x_3 \\ 6x_1 - 2x_2 - 3x_3 \end{bmatrix}$$

In other words $T^{-1}(x_1, x_2, x_3) = (-x_1 + x_2, -x_1 + x_3, 6x_1 - 2x_2 - 3x_3)$

- The matrix of T relative to the bases B and B':

$T: V \to W$ a linear transformation

$B = \{\boldsymbol{v}_1, \boldsymbol{v}_2, \cdots, \boldsymbol{v}_n\}$ a basis for V

$B' = \{\boldsymbol{w}_1, \boldsymbol{w}_2, \cdots, \boldsymbol{w}_m\}$ a basis for W

Thus, the matrix of T relative to the bases B and B' is

$$A = \left[[T(\boldsymbol{v}_1)]_{B'} \,\middle|\, [T(\boldsymbol{v}_2)]_{B'} \,\middle|\, \cdots \,\middle|\, [T(\boldsymbol{v}_n)]_{B'} \right] \in M_{m \times n}$$

- Transformation matrix for nonstandard bases:

Let V and W be finite-dimensional vector spaces with basis B and B' respectively, where

$$B = \{\boldsymbol{v}_1, \boldsymbol{v}_2, \cdots, \boldsymbol{v}_n\}$$

If $T\colon V \to W$ a linear transformation such that

$$[T(\boldsymbol{v}_1)]_{B'} = \begin{bmatrix} a_{11} \\ a_{21} \\ \vdots \\ a_{m1} \end{bmatrix}, \quad [T(\boldsymbol{v}_2)]_{B'} = \begin{bmatrix} a_{12} \\ a_{22} \\ \vdots \\ a_{m2} \end{bmatrix}, \cdots, [T(\boldsymbol{v}_n)]_{B'} = \begin{bmatrix} a_{1n} \\ a_{2n} \\ \vdots \\ a_{mn} \end{bmatrix}$$

Then the $m \mathrm{x} n$ matrix whose n columns correspond to $[T(\boldsymbol{v}_i)]_{B'}$

$$A = \begin{bmatrix} a_{11} & a_{12} & \cdots & a_{1n} \\ a_{21} & a_{22} & \cdots & a_{2n} \\ \vdots & \vdots & \ddots & \vdots \\ a_{m1} & a_{m2} & \cdots & a_{mn} \end{bmatrix}$$

is such that $[T(\boldsymbol{v})]_{B'} = A[(\boldsymbol{v})]_B$ for every $\boldsymbol{v}$ in V

- Ex 4: (Finding a matrix relative to nonstandard bases)

  Let the L. T. $T: R^2 \to R^2$ defined by $T(x_1, x_2) = (x_1 + x_2,\ 2x_1 - x_2)$

  Find the matrix of T relative to the basis

$$B = \{(1,\ 2),\ (-1,\ 1)\} \text{ and } B' = \{(1,\ 0),\ (0,\ 1)\}$$

Sol:

$$T(1,\ 2) = (3,\ 0) = 3(1,\ 0) + 0(0,\ 1),\ T(-1,\ 1) = (0,\ -3) = 0(1,\ 0) - 3(0,\ 1)$$

$$[T(1,2)]_{B'} = \begin{bmatrix} 3 \\ 0 \end{bmatrix}, \quad [T(-1,1)]_{B'} = \begin{bmatrix} 0 \\ -3 \end{bmatrix}$$

The matrix of T relative to the bases B and B':

$$A = \left[[T(1,2)]_{B'} \;\; [T(-1,1)]_{B'} \right] = \begin{bmatrix} 3 & 0 \\ 0 & -3 \end{bmatrix}$$

- Ex 5:

For the L. T. $T: R^2 \to R^2$ given in example 4, use the matrix A to find $T(\boldsymbol{v})$, where $\boldsymbol{v} = (2, 1)$

Sol:

$$\boldsymbol{v} = (2,1) = 1(1,2) - 1(-1,1) \qquad B = \{(1,2), (-1,1)\}$$

$$\Rightarrow [\boldsymbol{v}]_B = \begin{bmatrix} 1 \\ -1 \end{bmatrix}$$

$$\Rightarrow [T(\boldsymbol{v})]_{B'} = A[\boldsymbol{v}]_B = \begin{bmatrix} 3 & 0 \\ 0 & -3 \end{bmatrix}\begin{bmatrix} 1 \\ -1 \end{bmatrix} = \begin{bmatrix} 3 \\ 3 \end{bmatrix}$$

$$\Rightarrow T(\boldsymbol{v}) = 3(1, 0) + 3(0, 1) = (3, 3)$$

$B' = \{(1, 0), (0, 1)\}$

- Check:

$$T(2, 1) = (2 + 1, 2(2) - 1) = (3, 3)$$

- Notes:

(1) For the special case where $V = W$ and $B = B'$, the matrix A is called the matrix of T relative to the basis B

(2) If $T: V \to V$ is the identity transformation, then the matrix of T relative to the basis $B = \{\boldsymbol{v}_1, \boldsymbol{v}_2, \cdots, \boldsymbol{v}_n\}$ is the identity matrix I_n

6.4 Similarity of Matrices

- Similar matrix

  For square matrices A and A' of order n, A' is said to be similar to A if there exist an invertible matrix P such that $A' = P^{-1}AP$

- Theorem 6.12: (Properties of similar matrices)

  Let A, B, and C be square matrices of order n. Then the following properties are true.

  (1) A is similar to A.

  (2) If A is similar to B, then B is similar to A.

  (3) If A is similar to B and B is similar to C, then A is similar to C.

- Ex 1: (Similar matrices)

$$(a)\ A = \begin{bmatrix} 2 & -2 \\ -1 & 3 \end{bmatrix} \text{ and } A' = \begin{bmatrix} 3 & -2 \\ -1 & 2 \end{bmatrix} \text{ are similar}$$

$$\text{because } A' = P^{-1}AP, \text{ where } P = \begin{bmatrix} 1 & 1 \\ 0 & 1 \end{bmatrix}$$

$$(b)\ A = \begin{bmatrix} -2 & 7 \\ -3 & 7 \end{bmatrix} \text{ and } A' = \begin{bmatrix} 2 & 1 \\ -1 & 3 \end{bmatrix} \text{ are similar}$$

$$\text{because } A' = P^{-1}AP, \text{ where } P = \begin{bmatrix} 3 & -2 \\ 2 & -1 \end{bmatrix}$$

6.5 Applications of Linear Transformations

- The Geometry of Linear Transformations In R^2

(a) Reflection in y-axis

$$\begin{bmatrix} -1 & 0 \\ 0 & 1 \end{bmatrix}\begin{bmatrix} x \\ y \end{bmatrix} = \begin{bmatrix} -x \\ y \end{bmatrix}$$

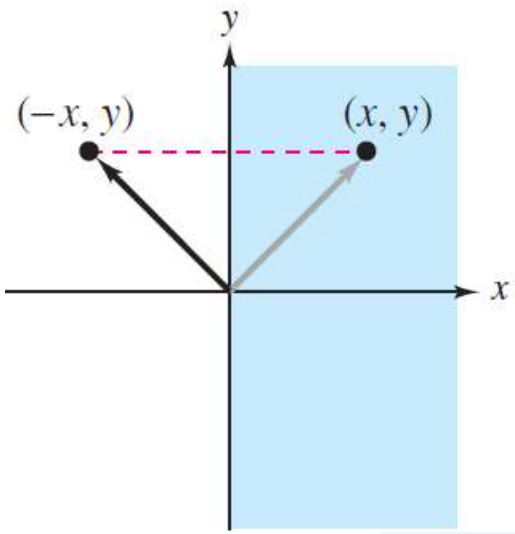

$T(x, y) = (-x, y)$

(b) Reflection in x-axis

$$\begin{bmatrix} 1 & 0 \\ 0 & -1 \end{bmatrix}\begin{bmatrix} x \\ y \end{bmatrix} = \begin{bmatrix} x \\ -y \end{bmatrix}$$

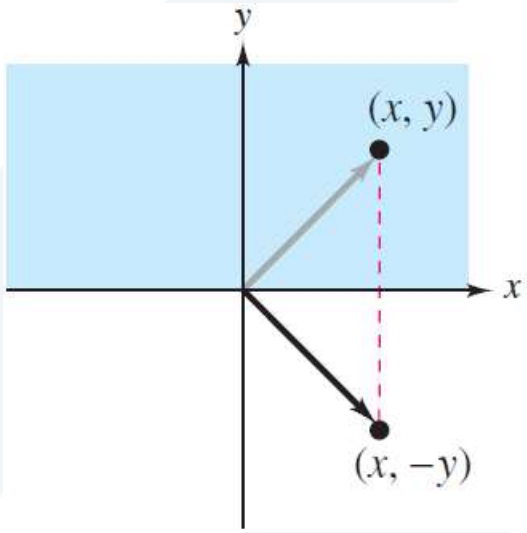

$T(x, y) = (x, -y)$

(c) Reflection in line $y = x$

$$\begin{bmatrix} 0 & 1 \\ 1 & 0 \end{bmatrix}\begin{bmatrix} x \\ y \end{bmatrix} = \begin{bmatrix} y \\ x \end{bmatrix}$$

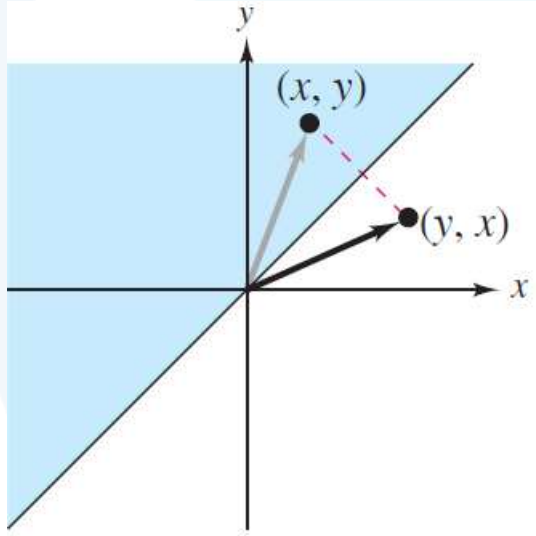

$T(x, y) = (y, x)$

(d) Horizontal expansions and contractions $\begin{bmatrix} k & 0 \\ 0 & 1 \end{bmatrix}\begin{bmatrix} x \\ y \end{bmatrix} = \begin{bmatrix} kx \\ y \end{bmatrix}$

$T(x, y) = (kx, y)$

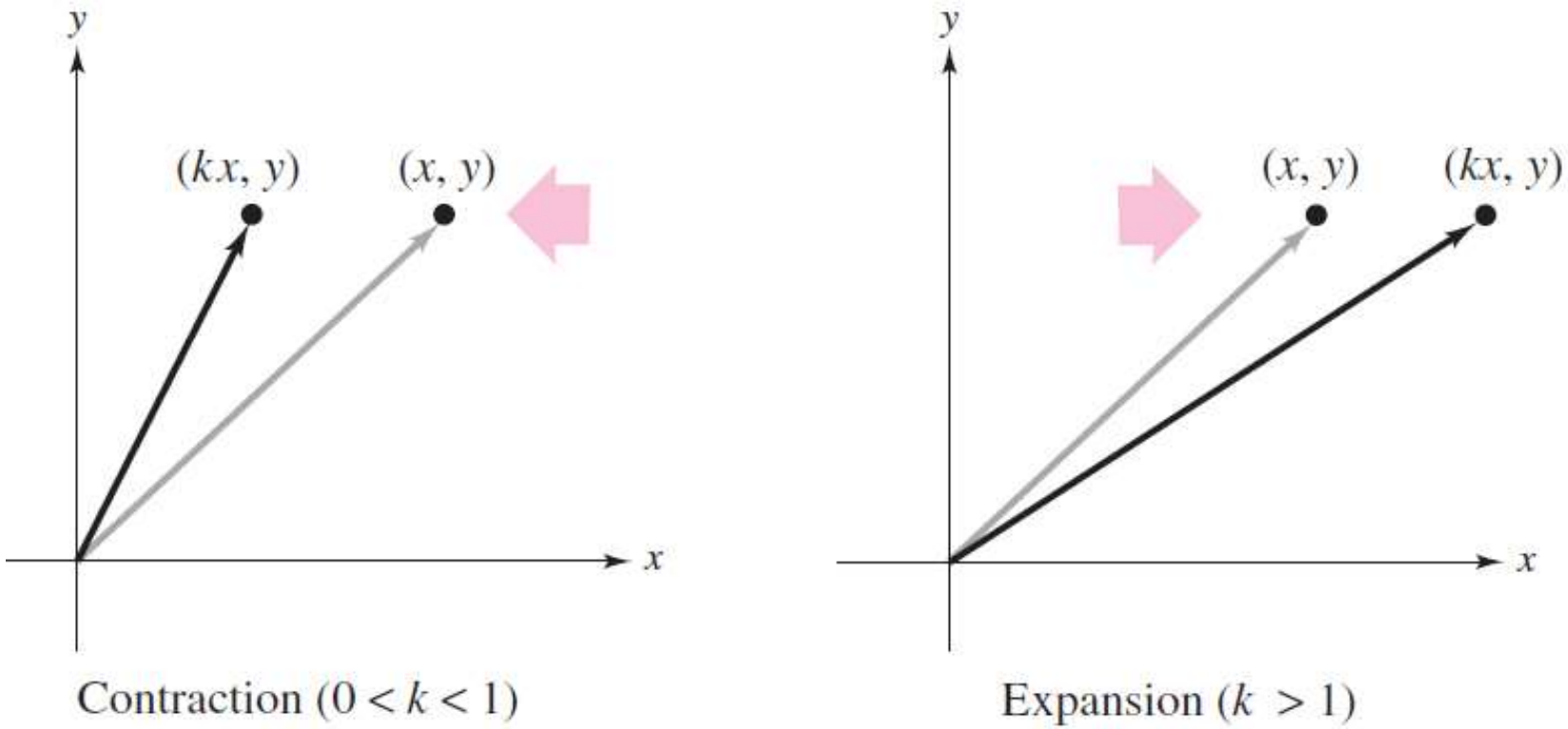

Contraction $(0 < k < 1)$ Expansion $(k > 1)$

(d) Vertical expansions and contractions $\begin{bmatrix} 1 & 0 \\ 0 & k \end{bmatrix}\begin{bmatrix} x \\ y \end{bmatrix} = \begin{bmatrix} x \\ ky \end{bmatrix}$

$T(x, y) = (x, ky)$

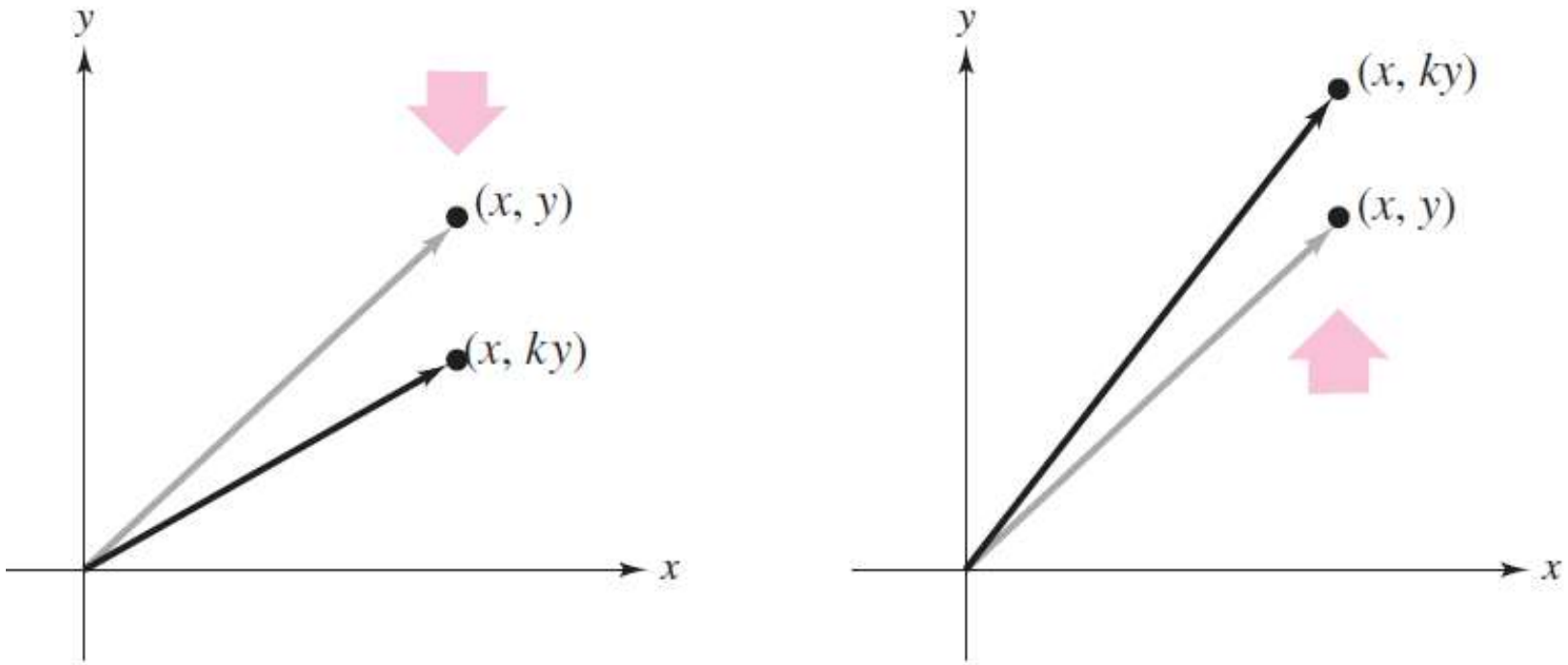

Contraction $(0 < k < 1)$ Expansion $(k > 1)$

(*e*) Horizontal shear

$$\begin{bmatrix} 1 & k \\ 0 & 1 \end{bmatrix}\begin{bmatrix} x \\ y \end{bmatrix} = \begin{bmatrix} x + ky \\ y \end{bmatrix}$$

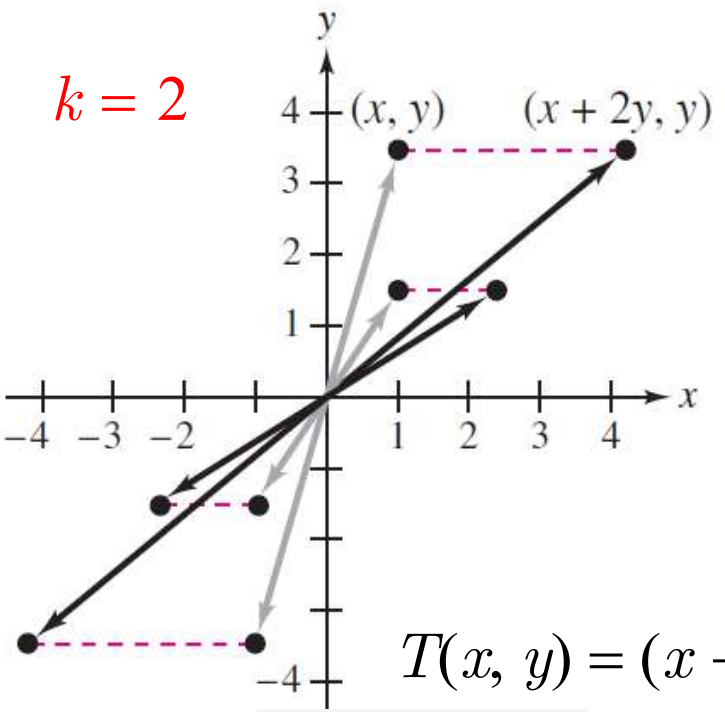

$$T(x, y) = (x + ky, y)$$

(*f*) Vertical shear

$$\begin{bmatrix} 1 & 0 \\ k & 1 \end{bmatrix}\begin{bmatrix} x \\ y \end{bmatrix} = \begin{bmatrix} x \\ kx + y \end{bmatrix}$$

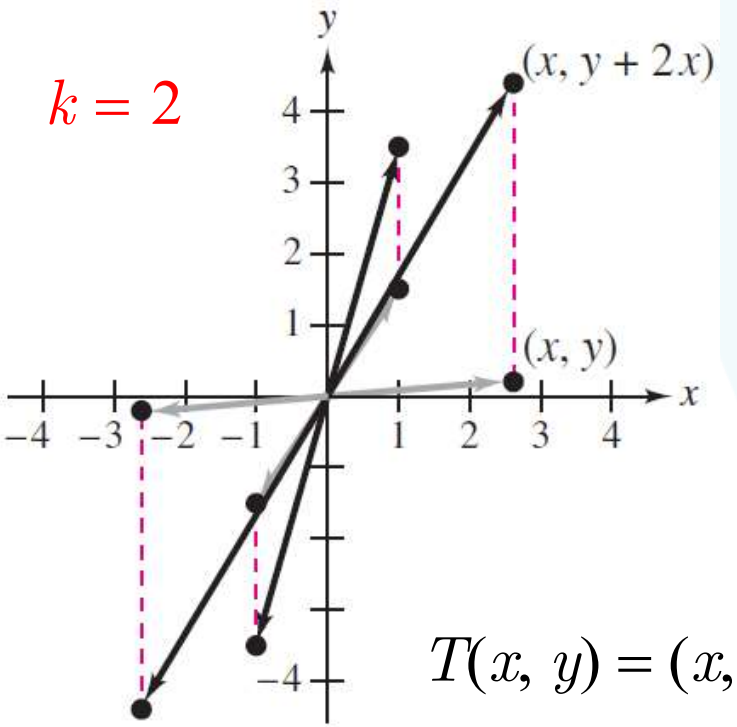

$$T(x, y) = (x, kx + y)$$

- Rotation In R^3

Rotation about the z-axis

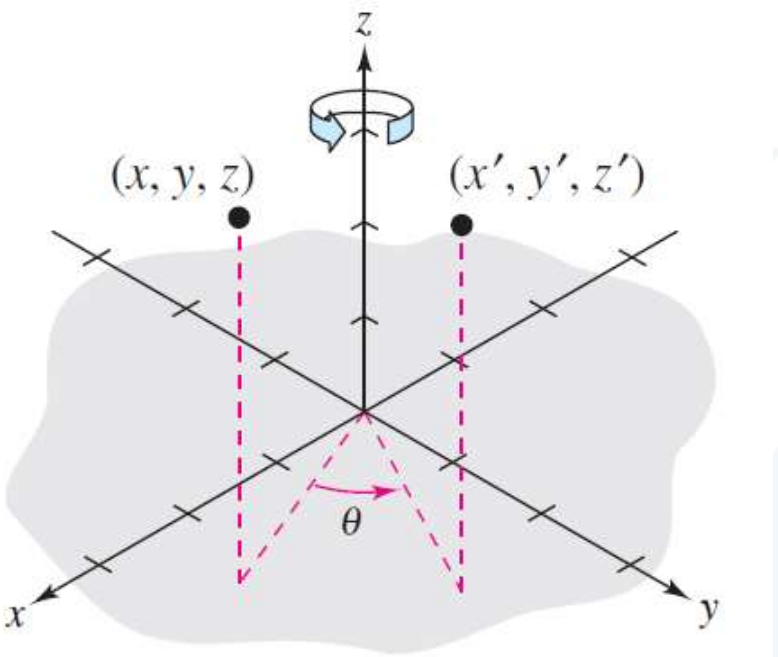

$$\begin{bmatrix} x' \\ y' \\ z' \end{bmatrix} = \begin{bmatrix} \cos\theta & -\sin\theta & 0 \\ \sin\theta & \cos\theta & 0 \\ 0 & 0 & 1 \end{bmatrix} \begin{bmatrix} x \\ y \\ z \end{bmatrix} = \begin{bmatrix} x\cos\theta - y\sin\theta \\ x\sin\theta + y\cos\theta \\ z \end{bmatrix}$$

$$A = \begin{bmatrix} \cos 60^\circ & -\sin 60^\circ & 0 \\ \sin 60^\circ & \cos 60^\circ & 0 \\ 0 & 0 & 1 \end{bmatrix} = \begin{bmatrix} 1/2 & -\sqrt{3}/2 & 0 \\ \sqrt{3}/2 & 1/2 & 0 \\ 0 & 0 & 1 \end{bmatrix}$$

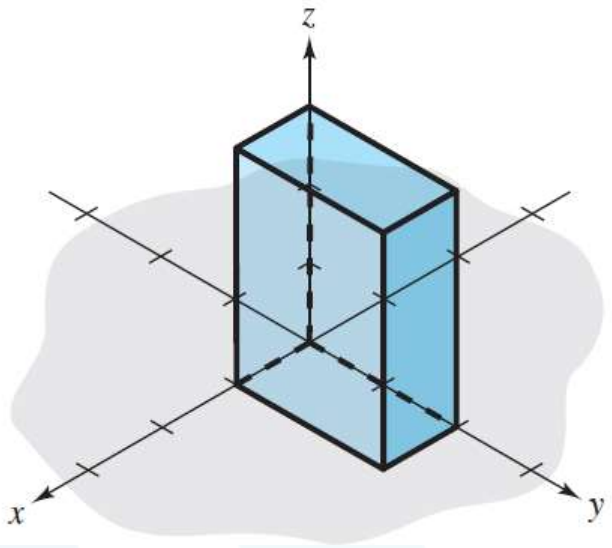

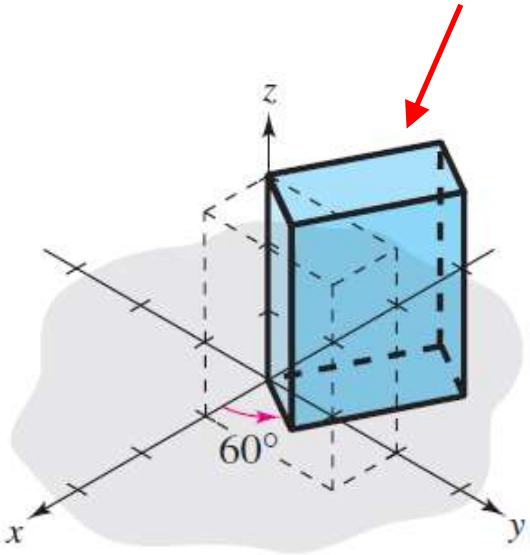

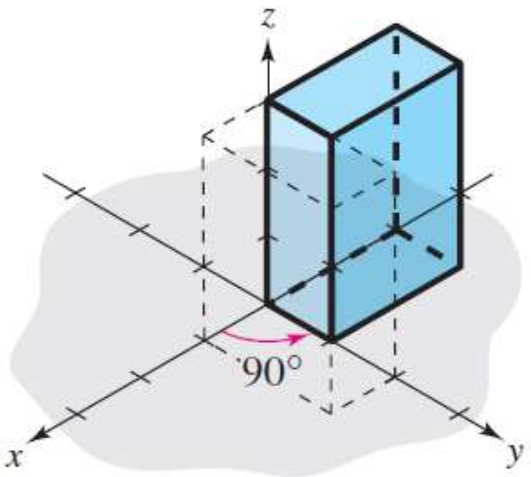

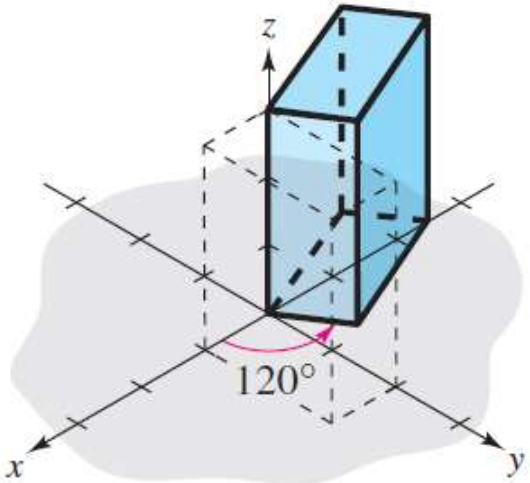

Rotation about the x-axis

$$\begin{bmatrix} 1 & 0 & 0 \\ 0 & \cos\theta & -\sin\theta \\ 0 & \sin\theta & \cos\theta \end{bmatrix}$$

Rotation about the y-axis

$$\begin{bmatrix} \cos\theta & 0 & \sin\theta \\ 0 & 1 & 0 \\ -\sin\theta & 0 & \cos\theta \end{bmatrix}$$

Rotation about the z-axis

$$\begin{bmatrix} \cos\theta & -\sin\theta & 0 \\ \sin\theta & \cos\theta & 0 \\ 0 & 0 & 1 \end{bmatrix}$$

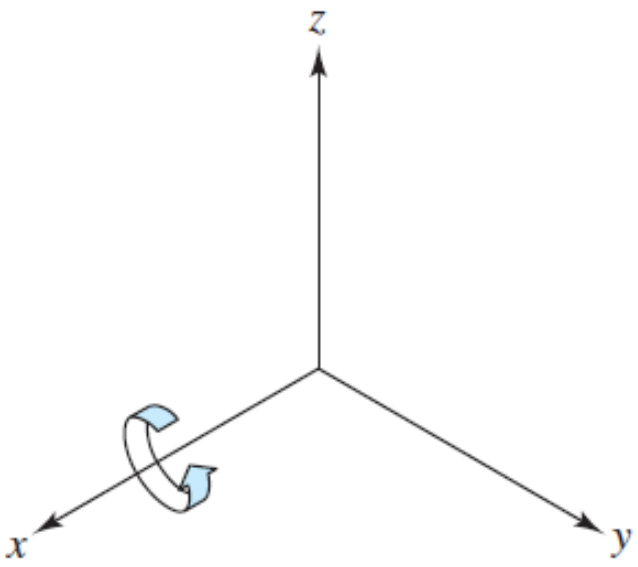

Rotation about x-axis

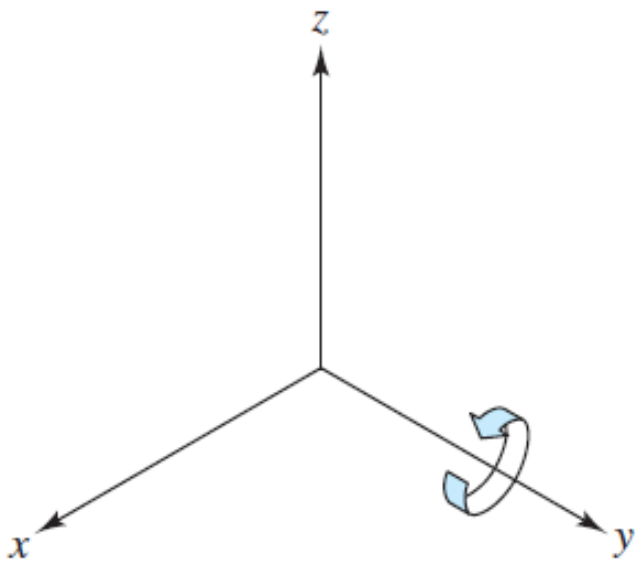

Rotation about y-axis

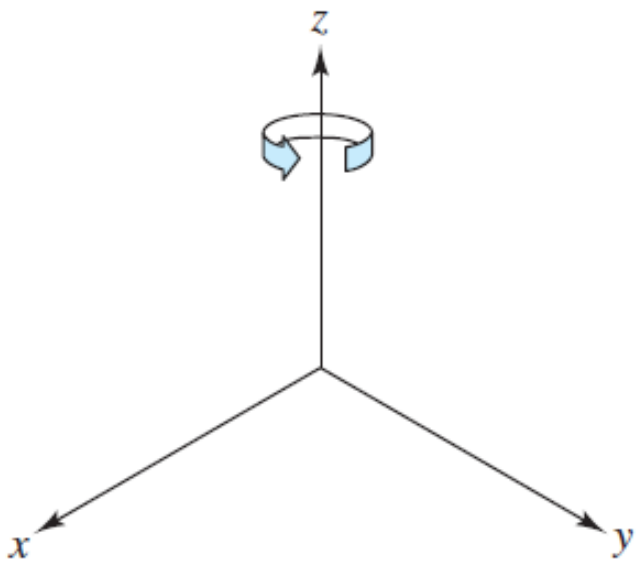

Rotation about z-axis

Rotation of 90° about the x-axis

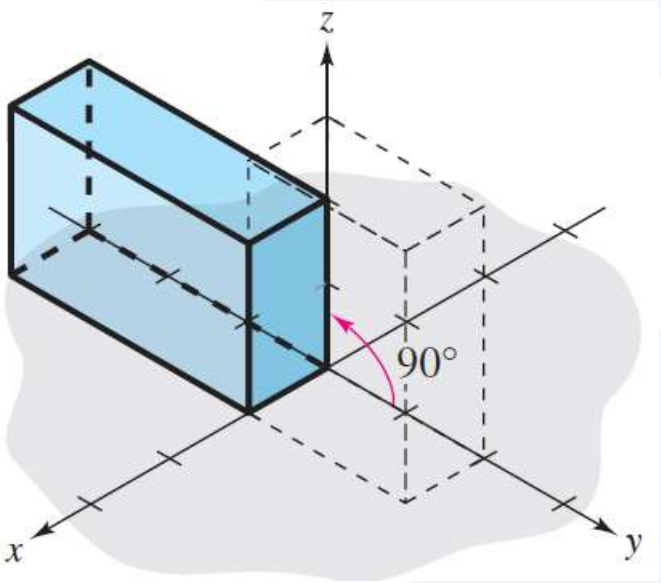

$$A = \begin{bmatrix} 1 & 0 & 0 \\ 0 & 0 & -1 \\ 0 & 1 & 0 \end{bmatrix}$$

Rotation of 90° about the y-axis

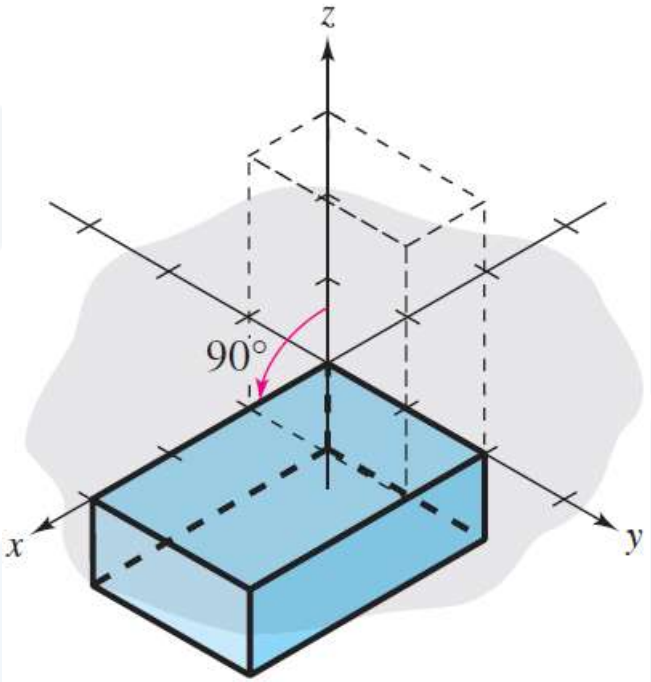

$$A = \begin{bmatrix} 0 & 0 & 1 \\ 0 & 1 & 0 \\ -1 & 0 & 0 \end{bmatrix}$$